FIRECO SRL
56, VIA E. FERMI
25064 GUSSAGO (BS) - ITALY
TEL. (+39) 030 37 33 916
FAX. (+39) 030 37 33 762

USE AND MAINTENANCE INSTRUCTION MANUAL

Pneumatic Mast

MULTIFUNCTIONAL PARTNER/COMPACT

COMPACT **PARTNER**

TRANSLATION OF THE ORIGINAL INSTRUCTIONS

Model/Serial Number:
See ANNEX A

Production year:
See ANNEX A

REVISION MATRIX OF THE MANUAL AND ITS PARTS

Edition No.	Revision No.	Date	Description
00	00	22/04/2021	First draft

WARNING

If the present document undergoes any changes made by the manufacturer, it will be the customer's responsibility to ensure that only the updated versions of the manual are actually available at the site of operation.

WARNING

THE OFFICIAL LANGUAGE CHOSEN BY THE MANUFACTURER IS ITALIAN.

We are not liable for translations into other languages that do not conform to the original meaning.

© FIRECO S.r.l. 2018

TABLE OF CONTENTS

REVISION MATRIX OF THE MANUAL AND ITS PARTS ---------- 1
TABLE OF CONTENTS ---------- 2

0 FOREWORD ---------- 5
1 PURPOSE OF THE USE AND MAINTENANCE INSTRUCTION MANUAL ---------- 5
2 WHO THIS MANUAL IS INTENDED FOR ---------- 6
3 STORING THIS INSTRUCTIONS MANUAL ---------- 6
4 INSTRUCTION MANUAL UPDATE ---------- 7
5 HOW TO READ THE INSTRUCTION MANUAL ---------- 7
6 DEFINITIONS ---------- 9

1 GENERAL INFORMATION ---------- 11
1 MANUFACTURER'S IDENTIFICATION DATA ---------- 11
2 CE MARKING OF THE MACHINE ---------- 11
3 DECLARATIONS ---------- 12
4 SAFETY STANDARDS ---------- 13
5 INFORMATION ON TECHNICAL ASSISTANCE ---------- 14
6 WARRANTY INFORMATION ---------- 15
7 ARRANGEMENTS AT THE CUSTOMER'S EXPENSE ---------- 16

2 SAFETY ---------- 17
1 SAFETY WARNINGS ---------- 17
2 INTENDED USE ---------- 19
3 CONTRAINDICATIONS FOR USE ---------- 21
4 REASONABLY FORESEEABLE MISUSE ---------- 21
5 OPERATOR'S SEAT ---------- 22
6 HAZARDOUS AREAS ---------- 22
7 SIGNS ---------- 22
8 SAFETY SYSTEMS ---------- 24
9 RESIDUAL RISKS ---------- 24

3 MACHINE DESCRIPTION ---------- 28
1 PRINCIPLE OF OPERATION ---------- 28
2 MAIN COMPONENTS ---------- 28
3 ENVIRONMENTAL CONDITIONS ---------- 42
4 TECHNICAL DATA ---------- 43

4 INSTALLATION ---------- 44

© FIRECO S.r.l. 2018

1 HAULING AND HANDLING ---- 44
2 STORAGE ---- 48
3 ARRANGEMENTS ---- 48
4 PLACING ---- 50
5 MOUNTING ---- 51
6 CONNECTIONS TO THE ENERGY SOURCES ---- 61
7 PRELIMINARY CHECKS / COMMISSIONING ---- 64

5 USE OF THE MACHINE ---- 65
1 WARNING ---- 65
2 CONTROL SYSTEM ---- 67
3 USE PROCEDURES ---- 71
4 DIAGNOSTICS AND TROUBLESHOOTING ---- 72

6 MAINTENANCE ---- 82
1 WARNING ---- 82
2 SPECIAL PRECAUTIONS ---- 83
3 INSULATION FROM SOURCES OF ENERGY AND DISSIPATION OF RESIDUAL ENERGIES ---- 84
4 USEFUL LIFE ---- 84
5 SCHEDULED ROUTINE MAINTENANCE ---- 85
6 EXTRAORDINARY MAINTENANCE ---- 87

7 ACCESSORIES AND SPARE PARTS ---- 88
1 SERVICE ---- 88
2 SPARE PARTS ---- 88

8 ADDITIONAL INSTRUCTIONS ---- 89
1 TAKING OUT OF SERVICE AND DISMANTLING ---- 89
2 WASTE DISPOSAL ---- 89

9 DRAWINGS AND DIAGRAMS ---- 90
1 MACHINE DRAWINGS ---- 90
2 PNEUMATIC DIAGRAMS ---- 91

© FIRECO S.r.l. 2018

DISCLAIMER

This manual contains proprietary information.
All rights are reserved and this manual may not be reproduced or photocopied (all or in part), without the prior written consent of FIRECO S.r.l.

FIRECO S.r.l.

- declares that the information contained in this manual is congruent with the technical and safety specifications of the product to which it refers.
- does not assume any responsibility for any damage, whether direct or indirect, caused to people or things that results from the use of this documentary material and the product to which it refers under conditions different from those provided and described in this document.
- reserves the right to carry out changes or improvements to this documentary material without prior notice.

All contents of the documents and the information delivered by FIRECO S.r.l. along with the product which this manual refers to, are and shall remain exclusive property of FIRECO S.r.l., which will be the only and exclusive holder of intellectual property rights of the above mentioned.

The customer may not modify, alter or intervene in any way on the product which this manual refers to, unless this is expressly provided by this manual; proceeding otherwise will make every form of warranty and support claims invalid.

© FIRECO S.r.l. 2018

0 FOREWORD

1 PURPOSE OF THE USE AND MAINTENANCE INSTRUCTION MANUAL

This manual has been realised in order to provide the user with a general knowledge of the machine and to allow for its use under safe conditions.

This instruction manual is an integral part of the machine and has the purpose to provide all the necessary information for:

- the manipulation of the machine, packed and unpacked, under safe conditions;
- the correct installation of the machine;
- the knowledge of the machine's technical specifications;
- the extensive knowledge of its functioning and its limits;
- information about the qualifications and the specific training required of the operators and the maintainers of the machine;
- the extensive knowledge of the intended, non-intended and prohibited uses;
- its proper use under safe conditions;
- conducting maintenance and repair work in a correct and safe manner;
- the technical support and the spare parts management;
- the disposal of waste produced by the machine;
- the divestment of the machine under safe conditions and in compliance with the applicable regulations for the worker's health and safety and for the environment protection.

This document assumes that, in installations where this machine is intended to be used, the current safety and hygiene standards will be observed.

WARNING

In accordance with the rules in force, the qualified responsible person is obliged to carefully read the content of this Instruction Manual and to have the operating and maintenance personnel read the parts that pertain to their area of responsibility.

The instructions, documentation and drawings contained in this manual are of a confidential technical character, therefore they are the sole and exclusive property of the manufacturer. Any reproduction of the whole or any parts of this manual or of its format, which does not comply with the purposes it was produced for, can only be done with the manufacturer's previous consent.

© FIRECO S.r.l. 2018

2 WHO THIS MANUAL IS INTENDED FOR

This Instruction Manual is intended for:

- the **installer** (qualified technical staff) in charge of the telescopic mast's installation and assembly;
- the **operator** in charge of the use of the telescopic mast, with particular attention to the steps of opening and closing of the same;
- the **maintainer** (qualified technical staff) in charge of taking care of the telescopic mast maintenance;
- the **operator** in charge of the product disposal at the end of its life cycle;
- in general, for all the qualified staff responsible for the use and maintenance of the machine.

The machine should be used only by qualified staff, in particular by persons who:

- are adults;
- are physically and mentally capable of performing particularly difficult technical work;
- have been instructed adequately for the use and maintenance of the machine;
- have been judged suitable by the employer to carry out the task with which they have been entrusted;
- are able to understand and interpret the operator's manual and the safety requirements;
- know the emergency procedures and their implementation;
- understand the operational procedures defined by the manufacturer of the machine.

WARNING

With the term QUALIFIED/SPECIALIZED STAFF we intend staff that, as a result of training and professional experience, was expressly authorised to perform the installation, use and maintenance of the machine.

3 STORING THIS INSTRUCTIONS MANUAL

The Instruction Manual must be stored carefully and must accompany the machine in all the transfers of property that it may have in its life cycle.

The storing must be done handling this manual with care, with clean hands and avoiding dirty surfaces.

Removing, tearing or arbitrarily changing any of its parts is strictly forbidden.

The manual should be stored in an environment protected from humidity and heat and very close to the machine it relates to.

© FIRECO S.r.l. 2018

4 INSTRUCTION MANUAL UPDATE

The manufacturer shall be liable solely of instructions drawn up and validated by the same (Original Instructions).

Any translation MUST always be accompanied by the Original Instructions, in order to verify the translation correctness. In any case, the manufacturer is not to be held responsible for translations that are not approved by the manufacturer themselves; therefore, if an inconsistency is detected, it will be necessary to pay attention to the original language and possibly contact the manufacturer's sales office which will carry out the necessary modifications.

The manufacturer reserves the right for themselves to make changes to the project, variations/improvements to the machine and to update the Instruction Manual without providing any notice to the customers.

However, in the case of modifications to the machine installed at the customer's site, agreed with the manufacturer and involving the adaptation of one or more chapters of the instruction manual, the manufacturer will be responsible for sending parts of the manual that were affected by the changes along with a new global revision model of the same to the customer. It will be the Customer's responsibility, following the instructions that come with the updated documentation, to replace in all the copies that he has the parts which are no longer valid.

5 HOW TO READ THE INSTRUCTION MANUAL

The manual is divided into chapters, each of which is dedicated to a specific information category and therefore regards the operators for whom the relevant skills have been defined.

To facilitate the immediate understanding of the text, terms, abbreviations and pictograms are used, the meaning of which is indicated in paragraph 6.

FIGURES NUMBERING

Each figure is numbered progressively. The numbering works as follows:

Example Figure 0.1.2

Figure	0	-	1	.	2
	↓		↓		↓
	Chapter	-	Paragraph	.	Progressive number

The progressive number starts from 1 in each new paragraph.

TABLES NUMBERING

Each table is numbered progressively.

The numbering works as follows:

Example Table 0-1.2

Table	0	-	1	.	2
	↓		↓		↓
	Chapter	-	Paragraph	.	Progressive number

The progressive number starts from 1 in each new paragraph.

ABBREVIATIONS

Ch. = Chapter
Par. = Paragraph
Sec. = Section
P. = Page
Fig. = Figure
Tab. = Table

UNITS OF MEASUREMENT

The units of measurement used are those indicated by the International System (**SI**).

Fundamental quantities	Unit of measurement	Symbol
Time interval	second	s
Length	meter	m
Mass	kilogram	kg
Thermodynamic temperature	kelvin	K
Substance quantity	mole	mol
Electrical current intensity	ampere	A
Light Intensity	candela	cd
Temperature	Celsius	°C

Mechanical quantities	Unit of measurement	Symbol	Conversion
Frequency	hertz	Hz	1 Hz = 1 s^{-1}
Force	newton	N	1 N = 1 kg m s^{-2}
Pressure	bar	bar	1 bar = 100 kN m^{-2}
Work, energy, heat	joule	J	1 J = 1 N m
Power	watt	W	1 W = 1 J s^{-1}

© FIRECO S.r.l. 2018

6 DEFINITIONS

MACHINERY DIRECTIVE 2006/42/EC (Article 2, Definitions)

MANUFACTURER Natural or legal person who designs and/or manufactures machinery or partly completed machinery covered by this Directive and is responsible for the conformity of the machinery or the partly completed machinery with this Directive with a view to its being placed on the market, under his own name or trademark or for his own use. In the absence of a manufacturer as defined above, any natural or legal person who places on the market or puts into service machinery or partly completed machinery covered by this Directive shall be considered a manufacturer.

PLACING ON THE MARKET Making available for the first time in the Community machinery or partly completed machinery or partly completed machinery with a view of distribution or use, whether for reward or free of charge.

PUTTING INTO SERVICE The first use, for its intended purpose, in the Community, of machinery covered by this Directive.

SAFETY COMPONENT Component

- which serves to fulfil a safety function,
- which is independently placed on the market,
- the failure and/or malfunction of which endangers the safety of persons, and
- which is not necessary in order for the machinery to function, or for which normal components may be substituted in order for the machinery to function.

ANNEX 1 MACHINERY DIRECTIVE 2006/42/EC (p. 1.1.1, Definitions)

HAZARD A potential source of injury or damage to health.

DANGER ZONE Any zone within and/or in the vicinity of a machine in which the presence of a person constitutes a risk to the health and safety of the said person.

EXPOSED PERSON Any person wholly or partially in a danger zone.

OPERATOR The person who is in charge of installing, operating, adjusting, cleaning, repairing, moving a machine and performing the maintenance on such machine.

RISK Combination of the probability and the degree of an injury or damage to health that can arise in a hazardous situation.

GUARD Part of the machinery used specifically to provide protection by means of a physical barrier.

© FIRECO S.r.l. 2018

PROTECTION DEVICE Device (other than a guard) which reduces the risk, either alone or in conjunction with a guard.

INTENDED USE The use of machinery in accordance with the information provided in the instructions for use.

REASONABLY FORESEEABLE MISUSE The use of machinery in a way not intended in the instructions for use, but which may result from readily predictable human behaviour.

RESIDUAL RISKS Risks that remain despite the inherent safe design measures, safeguarding and complementary protective measures adopted.

OTHER DEFINITIONS

ORDINARY MAINTENANCE Type of maintenance interventions during the life cycle, with the purpose of

- keeping the original integrity of the good;
- maintaining or restoring the efficiency of the goods;
- limiting the normal degradation;
- ensuring the useful life of the good;
- coping with accidental events.

EXTRAORDINARY MAINTENANCE Type of non-recurring servicing actions that are quite costly in comparison to the value of the replacement of the item and the annual costs of its ordinary maintenance.

QUALIFICATION OF OPERATORS

SYMBOL	DESCRIPTION
	Generic unskilled worker
	1st level machine operator
	2nd level machine operator
	Lifting and handling vehicle operator
	Mechanical maintainer
	Electric maintainer
	Technician of the manufacturer

© FIRECO S.r.l. 2018

1 GENERAL INFORMATION

1 MANUFACTURER'S IDENTIFICATION DATA

MANUFACTURER	FIRECO Srl
LEGAL ADMINISTRATIVE SEAT	56, Via Enrico Fermi – 25064 Gussago (BS) – ITALY
TELEPHONE	(+39) 030 37 33 916
FAX	(+39) 030 37 33 762
E-MAIL	info@fireco.eu
SPARE PARTS AFTER-SALES SERVICE	
CALL CENTER	
CONTACTS	

2 CE MARKING OF THE MACHINE

Each mast is identified by a CE mark and shows indelible reference data of the same (serial number).
The brand is always placed on the main tube.
For any communication with the manufacturer or service centers always quote these references.

© FIRECO S.r.l. 2018

3 DECLARATIONS

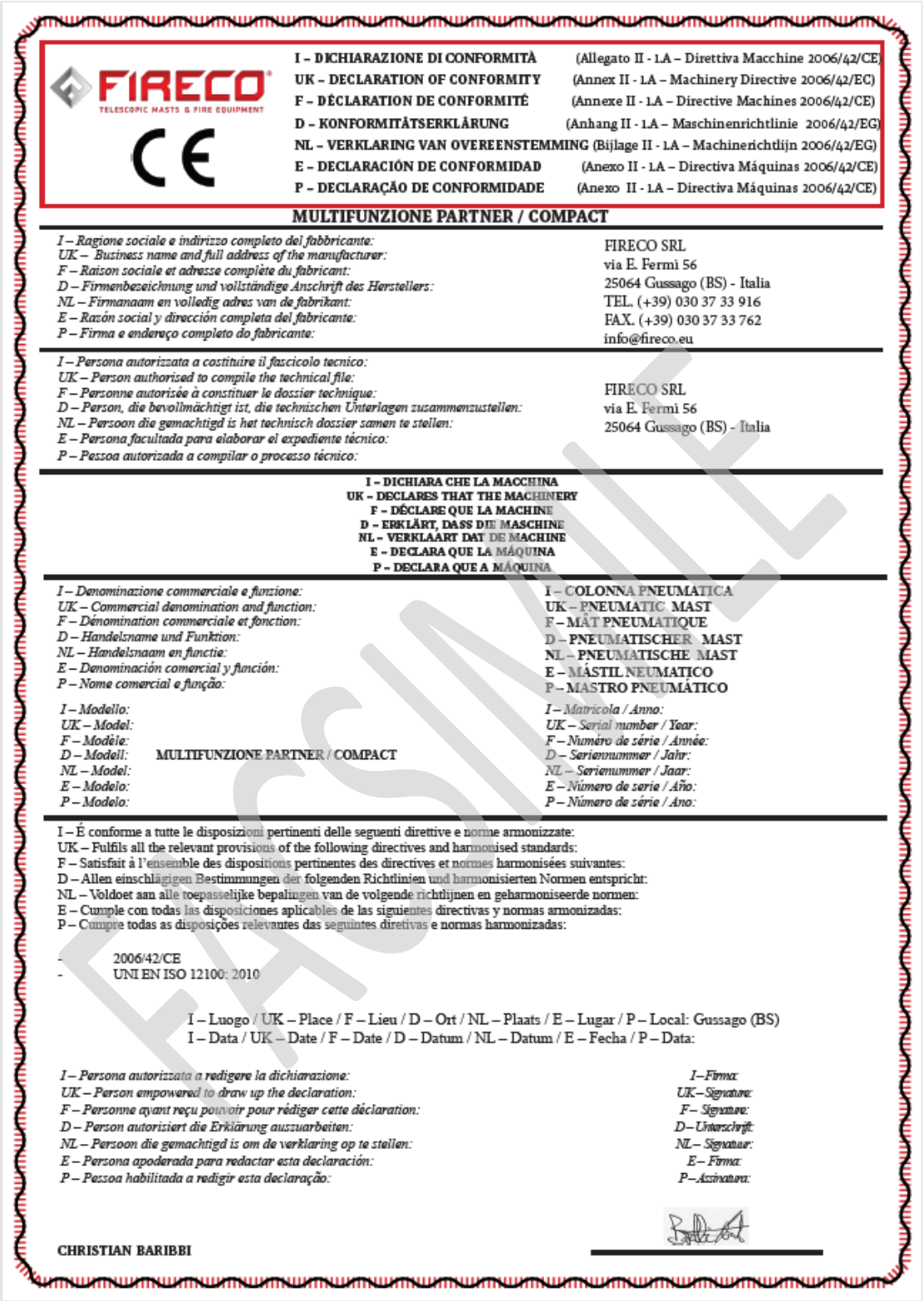

FIRECO
TELESCOPIC MASTS & FIRE EQUIPMENT

CE

I – DICHIARAZIONE DI CONFORMITÀ (Allegato II - 1.A – Direttiva Macchine 2006/42/CE)
UK – DECLARATION OF CONFORMITY (Annex II - 1.A – Machinery Directive 2006/42/EC)
F – DÉCLARATION DE CONFORMITÉ (Annexe II - 1.A – Directive Machines 2006/42/CE)
D – KONFORMITÄTSERKLÄRUNG (Anhang II - 1.A – Maschinenrichtlinie 2006/42/EG)
NL – VERKLARING VAN OVEREENSTEMMING (Bijlage II - 1.A – Machinerichtlijn 2006/42/EG)
E – DECLARACIÓN DE CONFORMIDAD (Anexo II - 1.A – Directiva Máquinas 2006/42/CE)
P – DECLARAÇÃO DE CONFORMIDADE (Anexo II - 1.A – Directiva Máquinas 2006/42/CE)

MULTIFUNZIONE PARTNER / COMPACT

I – Ragione sociale e indirizzo completo del fabbricante:
UK – Business name and full address of the manufacturer:
F – Raison sociale et adresse complète du fabricant:
D – Firmenbezeichnung und vollständige Anschrift des Herstellers:
NL – Firmanaam en volledig adres van de fabrikant:
E – Razón social y dirección completa del fabricante:
P – Firma e endereço completo do fabricante:

FIRECO SRL
via E. Fermi 56
25064 Gussago (BS) - Italia
TEL. (+39) 030 37 33 916
FAX. (+39) 030 37 33 762
info@fireco.eu

I – Persona autorizzata a costituire il fascicolo tecnico:
UK – Person authorised to compile the technical file:
F – Personne autorisée à constituer le dossier technique:
D – Person, die bevollmächtigt ist, die technischen Unterlagen zusammenzustellen:
NL – Persoon die gemachtigd is het technisch dossier samen te stellen:
E – Persona facultada para elaborar el expediente técnico:
P – Pessoa autorizada a compilar o processo técnico:

FIRECO SRL
via E. Fermi 56
25064 Gussago (BS) - Italia

I – DICHIARA CHE LA MACCHINA
UK – DECLARES THAT THE MACHINERY
F – DÉCLARE QUE LA MACHINE
D – ERKLÄRT, DASS DIE MASCHINE
NL – VERKLAART DAT DE MACHINE
E – DECLARA QUE LA MÁQUINA
P – DECLARA QUE A MÁQUINA

I – Denominazione commerciale e funzione:
UK – Commercial denomination and function:
F – Dénomination commerciale et fonction:
D – Handelsname und Funktion:
NL – Handelsnaam en functie:
E – Denominación comercial y función:
P – Nome comercial e função:

I – COLONNA PNEUMATICA
UK – PNEUMATIC MAST
F – MÂT PNEUMATIQUE
D – PNEUMATISCHER MAST
NL – PNEUMATISCHE MAST
E – MÁSTIL NEUMATICO
P – MASTRO PNEUMÁTICO

I – Modello:
UK – Model:
F – Modèle:
D – Modell:
NL – Model:
E – Modelo:
P – Modelo:

MULTIFUNZIONE PARTNER / COMPACT

I – Matricola / Anno:
UK – Serial number / Year:
F – Numéro de série / Année:
D – Seriennummer / Jahr:
NL – Serienummer / Jaar:
E – Número de serie / Año:
P – Número de série / Ano:

I – È conforme a tutte le disposizioni pertinenti delle seguenti direttive e norme armonizzate:
UK – Fulfils all the relevant provisions of the following directives and harmonised standards:
F – Satisfait à l'ensemble des dispositions pertinentes des directives et normes harmonisées suivantes:
D – Allen einschlägigen Bestimmungen der folgenden Richtlinien und harmonisierten Normen entspricht:
NL – Voldoet aan alle toepasselijke bepalingen van de volgende richtlijnen en geharmoniseerde normen:
E – Cumple con todas las disposiciones aplicables de las siguientes directivas y normas armonizadas:
P – Cumpre todas as disposições relevantes das seguintes diretivas e normas harmonizadas:

- 2006/42/CE
- UNI EN ISO 12100: 2010

I – Luogo / UK – Place / F – Lieu / D – Ort / NL – Plaats / E – Lugar / P – Local: Gussago (BS)
I – Data / UK – Date / F – Date / D – Datum / NL – Datum / E – Fecha / P – Data:

I – Persona autorizzata a redigere la dichiarazione:
UK – Person empowered to draw up the declaration:
F – Personne ayant reçu pouvoir pour rédiger cette déclaration:
D – Person autorisiert die Erklärung auszuarbeiten:
NL – Persoon die gemachtigd is om de verklaring op te stellen:
E – Persona apoderada para redactar esta declaración:
P – Pessoa habilitada a redigir esta declaração:

I – Firma:
UK – Signature:
F – Signature:
D – Unterschrift:
NL – Signatuur:
E – Firma:
P – Assinatura:

CHRISTIAN BARIBBI

FACSIMILE

Figure 1-3.1 Facsimile of the Declaration of Conformity

The machine is realised in accordance with the relevant Community Directives that are applicable at the time of its placing on the market. The Declaration of Conformity is included in the present manual as ANNEX B.

PUTTING INTO SERVICE IS PROHIBITED

The machine may not be put into service after having undergone constructive modifications or additions of other components not included in the ordinary or extraordinary maintenance without the machine being re-declared compliant with the requirements of Directive 2006/42/EC and of applicable Directives EC/EU.

Place, date	The manufacturer
Gussago, 22/04/2021	FIRECO Srl - Legal Representative
	Christian Baribbi

4 SAFETY STANDARDS

The machine has been built in accordance with the technical standards listed below.

STANDARD	Title
UNI EN ISO 12100	Safety of machinery - General principles for design - Risk assessment and risk reduction

© FIRECO S.r.l. 2018

5 INFORMATION ON TECHNICAL ASSISTANCE

FIRECO S.r.l. provides, together with the product, a Certificate of Warranty that shall be valid for 24 months from the date of dispatch, as specified in the general conditions of sale.
Figure 1 shows a sample of the certificate that is in the packaging.

FIRECO
TELESCOPIC MASTS & FIRE EQUIPMENT

CERTIFICATO D'ORIGINE E GARANZIA
CERTIFICATE OF ORIGIN AND WARRANTY
CERTIFICAT D'ORIGINE ET GARANTIE
URSPRUNG - UND GARANTIEZEUGNIS
CERTIFICADO DE ORIGEN Y GARANTÍA
CERTIFICADO DE ORIGEM E GARANTIA

Prodotto		Cod./matricola	
Product	PNEUMATIC	Code/serial n°	CS.3516.NZ
Produit	TELESCOPIC MAST	Code/matricule	xxxxx/Yxx
Produkt		Artikelnr./Seriennr.	
Producto		Referencia/n° de serie	
Produto		Cód./Numero serie	

Si dichiara che il suddetto prodotto a marchio FIRECO, è stato costruito negli stabilimenti FIRECO ed è nuovo di fabbrica. La garanzia dura 24 mesi dalla consegna.

We declare that the above-mentioned FIRECO product has been manufactured in FIRECO plant and is brand-new. FIRECO guarantees the product 24 months from delivery.

Nous déclarons que le produit mentionné ci-dessus a été fabriqué dans les établissements FIRECO et est neuf. Fireco garantit ce produit 24 mois à partir de la date de livraison.

Hiermit erklären wir, dass das oben genannte Produkt der Marke FIRECO im FIRECO-Werk gebaut worden und fabrikneu ist. Die Garantiezeit beträgt 24 Monate ab Lieferdatum.

Nosotros declaramos que el anteriormente mencionado producto FIRECO ha sido manufacturado en la fábrica de FIRECO y que es totalmente nuevo. FIRECO garantiza el producto durante los 24 meses siguientes a la entrega.

Nós declaramos que o produto acima mencionado foi fabricado pela Fireco na fábrica Fireco e é totalmente novo. Fireco garante o produto por 24 meses após da entrega.

Gussago — **FIRECO**

Data/Date/Date/Datum/Fecha/Data

XX/XX/XXXX

FACSIMILE

Figure 1-5.1 Sample of the Certificate of Origin and Warranty

If malfunctions or failures that belong to the cases indicated by the warranty arise in parts of the machine during the period of validity, the manufacturer will repair or replace the defective parts after the appropriate checks on the machine.

It is of uttermost importance to keep in mind that, without the explicit written permission of the manufacturer, any modification made by the user will render void the warranty and relieve the manufacturer of all liability for any damage caused by a defective product.
This applies in particular when the above-mentioned modifications are performed on safety devices, thereby degrading their effectiveness. The same considerations apply when using non-original parts or parts different from those explicitly designated by the manufacturer as "safety devices".
Hence, we advise our customers to contact our Service, before carrying out the aforementioned interventions on the machine.
Any defects clearly and visibly present at the time of the product delivery (aesthetic defects on visible parts, cracks, dents, operating defects, missing parts etc.) must be immediately reported to the company.
The original Warranty Certificate of the mast is located at the end of this manual, as Annex C.

WARNING

The Manufacturer cannot be held responsible for defects not reported by the customer at the time of delivery.

6 WARRANTY INFORMATION

The following warranty conditions will apply:

- All repair operations will be performed at FIRECO S.r.l. headquarters.
- Before being delivered to FIRECO S.r.l., the product that needs repairing or replacing must have already been dismantled from the means on which it was installed, and must be in the same configuration as when it was supplied.
- The transport costs for the delivery of the faulty product to FIRECO S.r.l. are borne by the Customer.
- The transport costs for the return of the product from FIRECO S.r.l. to the Customer are borne by FIRECO S.r.l. if the product has been subjected to repair or replacement under warranty.
- The transport costs for the return of the product from FIRECO S.r.l. to the Client are borne by the Customer if the product has been subjected to repair or replacement outside of its warranty.

© FIRECO S.r.l. 2018

WARNING!

FIRECO is not responsible for any damage or malfunctions caused by:

- tampering and/or unauthorised repairs performed by the customer or by third parties;
- improper installation;
- improper storage and lack of adequate maintenance;
- negligence and/or misuse;
- improper use.

Such behaviors shall nullify every warranty obligation at the expense of FIRECO S.r.l.

7 ARRANGEMENTS AT THE CUSTOMER'S EXPENSE

Except for different contractual arrangements, the Customer will have to take care of:

- the arrangements for the installation, including supports and any required channeling;
- the energy supply sources required for the functioning of the machine (if not included), in accordance with the rules in force in the country of use.

© FIRECO S.r.l. 2018

2 SAFETY

1 SAFETY WARNINGS

WARNING

Before operating the machine, carefully read the instructions contained in this manual and carefully follow the steps reported.

GENERAL WARNINGS

The manufacturer has put the maximum commitment into designing a machine that is as SAFE as possible.

According to this purpose, the machine is equipped with all guards and safety devices that were considered necessary and accompanied by the sufficient information to be used safely and correctly.

For this purpose, for every human-machine interaction, when necessary, we recommend taking into account the following information:

- minimum qualification of the operator required;
- number of operators required;
- state of the machine;
- residual risks;
- personal means of protection required or recommended;
- prevention of human errors;
- prohibitions/obligations relating to reasonably foreseeable misconduct.

The manufacturer considers themselves free from any responsibility for any damage caused by the machine to persons, animals or property in the event of:

- use of the machine by staff that is not authorized and that has not been trained adequately;
- improper use of the machine;
- power supply defects;
- incorrect installation;
- shortcomings in the scheduled maintenance;
- unauthorised changes or modifications;
- use of non-genuine parts or parts that are not compatible with the model;
- failure to comply with all or part of the instructions;
- use contrary to national specifications;
- disasters and exceptional events.

© FIRECO S.r.l. 2018

GENERAL SAFETY INSTRUCTIONS

The mobile elements must always be used in accordance with the manufacturer's recommendations, as indicated in this manual, which must always be available to the operator on the workplace.
All safety equipment placed on the mobile elements to avoid accidents and to safeguard the security may not be changed nor removed, but must be adequately safeguarded.
The user must immediately inform the employer or his immediate superior about any defects or anomalies detected in the mobile elements.
It is however essential to thoroughly follow the safety instructions indicated as follows:

- The use of the machine by unqualified persons or by minors is forbidden;
- It is absolutely forbidden to tamper any part of the machine and inhibit the safety devices installed on the machine;
- It is forbidden to modify the originally designated use of the machine, without direct authorisation from the manufacturer or without the assumption of full responsibility as imposed by the 2006/42/EC Machinery Directive;
- It is forbidden to use the machine if it is working but not in full efficiency;
- If not otherwise specified, the washing operations must be carried out only after deactivating the electric and pneumatic separation devices;
- Do not change any parts of the machine, for any reason. In case of malfunction due to a failure to comply with the above, the manufacturer shall not be liable for the consequences. It is recommended that you turn directly to the manufacturer for any changes;
- Place the machine according to the schemes provided by the manufacturer, otherwise the manufacturer shall not be considered liable for any issues;
- Do not install accessories on the main tube that might cause an ovalisation of this tube and thus lead to a malfunctioning of the mast;
- Avoid the use of clothes with grips which can hook to parts of the machine;
- Avoid using ties or other fluttering parts of clothing;
- Avoid wearing cumbersome rings or bracelets that can get hands stuck on the components of the machine.

It is forbidden to leave the mobile elements unattended.
Moreover, when necessary, the manual also includes further recommendations for the user on preventive measures, personal means of protection, information to prevent human errors and prohibitions related to behaviours not allowed but reasonably foreseeable.
However, the user can integrate the information supplied by the manufacturer with additional working instructions in order to contribute to the safe use of the machine, as long as these instructions are obviously not in contrast with what is reported in this Instruction Manual.

© FIRECO S.r.l. 2018

2 INTENDED USE

The pneumatic mast intended use is to lift a load of a given weight and size to a predetermined maximum height (multifunctional head), according to the indications from the catalog or the manufacturer's specifications.

WARNING

The use of products/materials different from those specified by the manufacturer, which can cause damage to the machine and dangerous situations for the operator and/or people close to the machine, is considered wrong and inappropriate.

PRODUCT USE LIMITATIONS

The limits of use vary in relation to the model purchased. The most important terms you will have to thoroughly check are:

- MAXIMUM LIFTABLE PAYLOAD
- WIND LOAD in relation to the exposed surface
- VERTICALITY OF THE MAST DURING USE
- ENVIRONMENTAL CONDITIONS OF USE

The information mentioned above can be found by consulting this manual and Annex A.

The "**maximum liftable payload**" defines the maximum weight of the equipment that can be installed on the multifunctional head mounted on top of the mast.

WARNING

To ensure the safe use of the mast, remember to install on its head only the lamp units that were specified when placing the order or in any case equipment whose weight does not exceed the limits of the maximum liftable payload. Contact the manufacturer for the necessary verifications and authorisations.

WARNING

In the event of snow, the total weight supported by the mast may increase significantly.

© FIRECO S.r.l. 2018

The term **'Wind load'** defines the maximum load resulting from the wind force acting on the mast and on the equipment installed on top of it. Please see Annex A for further details.

WARNING

To ensure the safe use of the mast, do not install accessories that might cause wind loads that exceed the limits indicated by the manufacturer or in the catalog. As the exposed surface increases, the allowed wind load could in fact decrease significantly. Contact the Manufacturer if the expected maximum exposed surface of the top equipment exceeds the project value.

WARNING

The manufacturer shall not be liable for any damages that may result from the use of the mast with wind conditions worse than those shown in the catalog or declared by the manufacturer.

As far as the machine's **verticality**, it is important to verify that the operating position of the mast is such that overturning is not possible.

Upon installation, the axis of the mast must form **a 90° angle** with the horizon.

If necessary, use a leveling system to support the machine.

If, for reasons associated with the use, the mast must be installed with different tilting angles, contact the manufacturer and communicate the data relating to the equipment that you intend to install on top of the mast (weight, size, center of gravity, etc.). In this way, it will be possible to request a verification of the maximum tilting angle allowed for the mast.

As far as the "**environmental conditions of work**", if adverse weather conditions are forecast or imminent, it is necessary to retract the mast in order to prevent possibly dangerous situations; in the case the event is immediate, operate the recovery intervention with maximum priority and, if this is not possible, isolate the installation area of the mast. This precaution should always be adopted upon long lasting installations and in the case in which control staff is not continually present.

WARNING

The verification of the product's limits of use must be carried out by the user, by applying the data reported in this manual and with reference to the table set out in ANNEX A of this manual, which can be found at the end of the same.

© FIRECO S.r.l. 2018

3 CONTRAINDICATIONS FOR USE

The machine must not be used:

- for uses other than those established by the manufacturer, different or not mentioned in the present manual;
- in environments that could be explosive, corrosive or with high concentrations of powders or oily substances suspended in the air;
- in environments with fire risk;
- in environments exposed to weather conditions that exceed the limits imposed;
- when safety devices are deactivated or out of order;
- with means that exclude users/parts of the machine itself.

4 REASONABLY FORESEEABLE MISUSE

In the following paragraphs you will find an outline of the incorrect but reasonably foreseeable uses of the machine.

INCORRECT BEHAVIOURS

The following are incorrect behaviours due to neglect, but not deliberate intentions:

- leaving the machine unattended when it is in motion.
- using the machine without having properly checked the correct functioning of the control, check and safety systems;
- using the machine in absence of periodic maintenance;
- using the machine without using the appropriate PPE; this behaviour can cause harm to the operator;
- using the machine without verifying the existence of the minimum space required; this behaviour may cause accidents as the operator, acting in tight spaces, may stumble or incur impacts;
- using the machine without having taken care of the work location and the surrounding spaces; this behaviour can cause damage to the operator by creating potential cause of stumbling or simply cause the operators to work in dangerous conditions;
- using the machine with lack of concentration or neglect; this behaviour can cause extremely serious accidents;
- using the machine with hasty behaviour resulting from pressure to keep the machine running in all circumstances. This behaviour can create potentially non-compliant working conditions.

© FIRECO S.r.l. 2018

INSTINCTIVE REACTIONS

Whenever a failure or a fault in the operation of the machine occurs, the operator must be able to judge if the solution of the problem pertains to his fields of competence and skill or if the assistance of specialized personnel will be needed.
For details relating to the maintenance operations and the management of failures and faults please refer to Chapter 6.

5 OPERATOR'S SEAT

The operator is normally located in the area adjacent to the mast, where the machine control system is. From this position, the operator is able to have full visibility on the devices operated.

6 HAZARDOUS AREAS

The area around the mast is to be considered dangerous because of the residual risks (please see the dedicated section).

WARNING

During the preparation and the use of the mast, unpredictable residual risks might persist. In order to preserve health and safety, delimit the area surrounding the mast by keeping unassigned staff off.

7 SIGNS

GENERAL INFORMATION

The pictograms are applied in areas where they are easily visible and readable by whoever approaches and at a point such that the person is able to react promptly to take the necessary measures to avoid the danger.
When possible, they have been applied in areas protected from the risk of damage, abrasion, chemical aggression, dust or anything that could alter their visibility and readability.
The operating temperature range goes from -40°C to +60°C, as long as there is no uneven distribution of the temperatures, which may adversely affect the thermal expansion of the material.
The surfaces on which the pictograms are applied must be clean, smooth and free from grease, oils or chemical products which reduce the adherence.

© FIRECO S.r.l. 2018

Check and clean the safety pictograms regularly to ensure good readability at a safe distance. When the products are subjected to extreme environmental conditions or when the safety pictograms no longer satisfy the required conditions of visibility, they must be replaced.

The mast must be installed in a way that the pictograms applied appear in areas where they are easily visible and readable from whoever approaches and at a point such that the person is able to react promptly to take the necessary measures to avoid the danger.

When possible, they must be displayed in areas protected from the risk of damage, abrasion, chemical aggression, dust or anything that could alter their visibility and readability.

The pictograms used in this manual are the following:

HAZARD PICTOGRAMS

SYMBOL	DESCRIPTION
	General Danger
	Danger caused by electricity
	Danger caused by suspended loads
	Hand crushing hazard, limb crushing hazard
	Overturning Hazard
	Electric shock danger due to contact or proximity of the end of the mast to high or medium voltage lines

PROHIBITION PICTOGRAMS

SYMBOL	DESCRIPTION
	Generic Prohibition
	Prohibition to remove the guards and protection and safety devices
	Prohibition to operate on moving elements
	Prohibition of access to unauthorised personnel

© FIRECO S.r.l. 2018

OBLIGATION PICTOGRAMS

SYMBOL	DESCRIPTION
	Obligation to read the instructions for the use
	Obligation to wear the safety helmet
	Obligation to wear the safety footwear
	Obligation to wear the safety gloves
	Obligation to verify the security systems efficiency

8 SAFETY SYSTEMS

The machine has various **safety systems**, which were selected after a careful analysis conducted in accordance with the applicable harmonised standards.

The main safety systems are the following:

- Anti-rotation system (see paragraph 3-2 for further details)
- Release valve (see paragraph 3-2 for further details)

9 RESIDUAL RISKS

It is necessary to pay attention to the following residual risks, which are present at the moment of the machine's use and which cannot be eliminated entirely.

WARNING: OVERTURNING HAZARD

The overturning hazard of an extended mast can derive from:

- the action of the wind, if it has not been adequately detected or blocked;
- incorrect installation of the mast;
- incorrect positioning of the vehicle on which the mast is installed.

To ensure the safe use of the mast with respect to the overturning hazard,

- please follow the instructions provided by the manufacturer in this document;
- limit access to the area surrounding the mast.

© FIRECO S.r.l. 2018

WARNING: COLLISION HAZARD

This risk refers to the possibility of the mast touching suspended structures, like balconies, bridges etc. while being extended. This might occur if the staff in charge of operating the mast has not carried out a proper assessment of the area.

Prior to the extension of the mast:

- check thoroughly for the possible presence of suspended structures;
- in the case suspended structures are present, set the mast at a suitable distance.

WARNING: DANGER OF SUDDEN VERTICAL DESCENT

The danger of sudden vertical descent refers to the possibility of a vertical descent of the mast, together with the equipment installed on top of it, after a failure.

Before the extension or retraction of the mast:

- thoroughly verify the integrity of all of the mast components, taking into account all the manufacturer's recommendations regarding the product Maintenance

WARNING: DANGER OF LIMB CRUSHING

The danger of limb crushing refers to the possibility that a part of the operator's body (typically a hand or an arm) may be crushed between the collars of the sections during the normal operations of closing of the mast and/or because of its sudden descent due to failure.

To ensure the safe use of the mast with respect to the limb crushing hazard,

- be constantly present during the machine use, yet remaining at a suitable distance.
- do not carry out any kind of work on the mast while it is moving.

© FIRECO S.r.l. 2018

WARNING: ELECTROCUTION HAZARD

Electrocution hazard refers to:

- the possibility that the mast, while extending, touches high voltage wires in the case the staff in charge of operating the mast has not carried out a proper assessment of the area;
- the use of power supply for the accessories mounted on the Mast;
- the use during bad weather/storms.

Prior to the extension of the mast:

- check thoroughly that no high voltage wires are present;
- in the case of presence of high voltage wires set the mast at a suitable distance;
- verify that the grounding cables are properly connected
- during the mast installation steps, the accessories mounted on the mast must not be fed with electrical power;
- insulate the mast from energy sources and discharge the residual energy before intervening on the machine (see paragraph 4.3)

ELECTROCUTION ON ELECTRICAL EQUIPMENT

The machine is provided with electrical equipment near potentially hazardous electrically powered parts (24VDC).

The risk for the operator is therefore that of an electric shock.

The connection to the electrical supply must be in accordance with the instructions in chapter 4-6.

The interventions to be performed inside the electrical equipment must be carried out while power is off, following the cutting of the power supply.

If necessary, during the fault detection activities, carry out interventions while the control unit is supplied with energy. All precautions required by safety standards must be taken to operate in the presence of dangerous voltage, under direct control authorized by the maintenance manager. In particular, operators will have to be qualified as "experts" in accordance with the standards EN 50110-1:2014 (Europe), NFPA 70E:2018 (USA) or CSA Z462:2018 (Canada), depending on the country of installation.

Measures have been taken (insulation, roofing, etc.) in order to protect the operator/maintainer from direct contact.

It is forbidden to remove or tamper with the security systems. It is mandatory to verify the security systems efficiency periodically.

Some pictographs can be found on the machine.

© FIRECO S.r.l. 2018

WARNING: SUSPENDED LOADS

During hauling and installation, the risks related to the movements of the loads can be summarized as follows:

- risk of falling
- risk of collision
- risk of overturning due to load handling

These risks may cause:

- impacts
- mashing
- crushing

to operators who are located in the vicinity of the pieces to be moved.

These risks can be eliminated only by the ability of the operator to perform the load hooking adequately.

Once the piece has been hooked, the operator must make sure that it is stable and balanced.

The operator must also check that the movement area of the load is vacant (no persons or other impediments are present).

In the case of areas with poor visibility, the operators must provide devices that offer a clear view even in areas that are not well visible from the control station of the lifting means.

During the movement of the load, the operator must warn about the beginning of this phase by means of an acoustic signal.

He must also make sure that these signals have been clearly heard by the other operators and that these have been able to recognize, without any ambiguity, the true source of the signals themselves.

The acoustic signal must be operated even when you notice people on the handling trajectory. In case the people start moving around, stop every maneuver.

© FIRECO S.r.l. 2018

3 MACHINE DESCRIPTION

1 PRINCIPLE OF OPERATION

The machine allows the users to take the equipment mounted on its top to great heights without using cumbersome fixed structures and especially without exposing the staff to the risk of falling during the equipment installation.
Once the system has been installed, it will use an external pneumatic energy source, (it could be an electric compressor or a compressed air feed line) for extending the mast, and therefore for the lifting of the top equipment, preventing the operator from having to reach the same height.
The operator MUST work directly from the ground near the mast or at a distance suitable for the mast to be completely visible, whenever the remote control system is required.
The different multifunctional mast models (PARTNER and COMPACT), given the same extension, differ in height when in their closed configuration (the COMPACT model is less cumbersome).
Internally, from a mechanical point of view, the two models differ mainly for the presence of different anti-rotation systems and different types of limit tubes. Please refer to the following paragraph for further details.

2 MAIN COMPONENTS

The MULTIFUNCTIONAL TELESCOPIC MAST is made with components that are guaranteed by the Quality Control activities carried out by FIRECO Srl.

The MULTIFUNCTIONAL pneumatic telescopic masts provide the solutions and the equipment described in the following paragraphs.

TUBULAR TELESCOPIC STRUCTURE

The tubular telescopic structure supports the device/load installed on the mast and it is composed of concentric anodised aluminum tubes (mast sections). The standard colour for the anodisation is silver-grey; other colours are available on request.
Each mast with n tubes is composed of a main tube (tube with the largest diameter) and n-1 mobile tubes (see Figure 3-2.1). Of these *n*-1 tubes, the one with the smallest diameter is called first mobile tube or top section, while the one with the largest diameter is called last mobile tube or $(n\text{-}1)^{th}$ mobile tube. As the name indicates, the first mobile tube is the first tube to be extended during the opening of the mast, and so forth up to the last mobile tube, which will be the last to be extended.

© FIRECO S.r.l. 2018

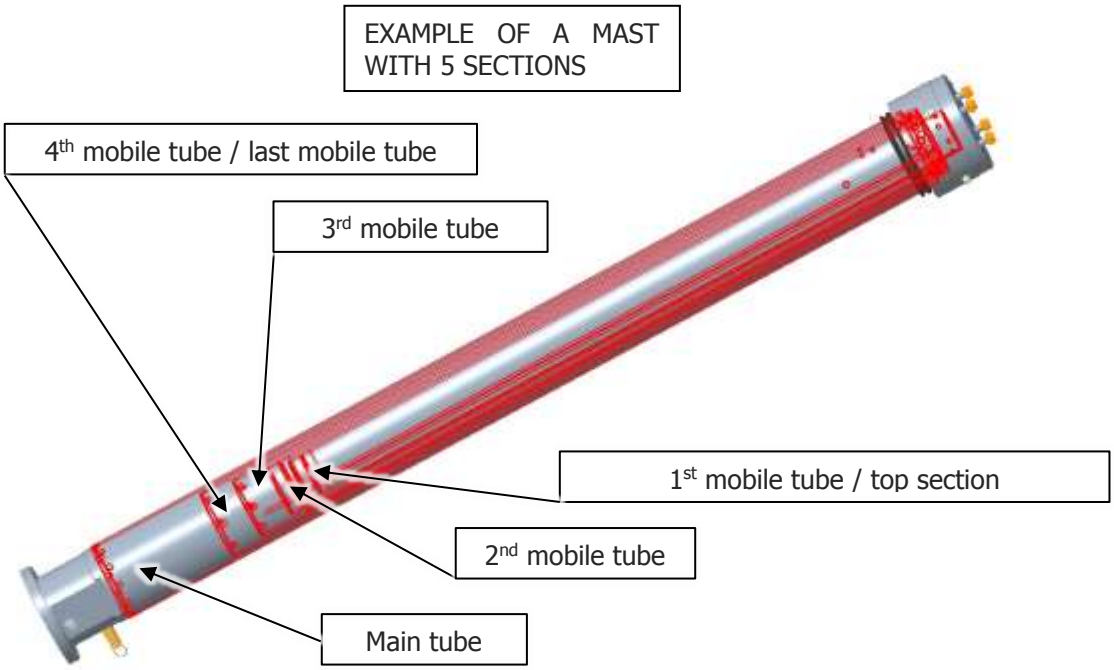

Figure 3-2.1: Telescopic Tubular Structure

Each mobile tube has a vertical groove (keyway) for the anti-rotation system.

As a piston bottom-fixing system, it is possible to have:

- threads, to fix the piston by means of screwing, or
- a series of holes, to fix the piston by means of screws and bolts.

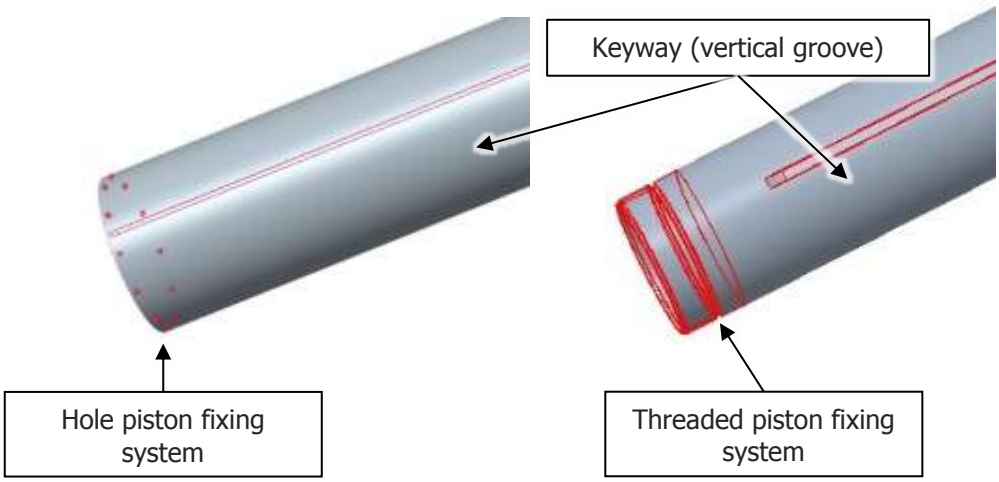

Figure 3-2.2: Grooves on mobile tubes – lower part of a mobile tube with fixing holes (left) or threads (right)

On the upper part of the tube are holes for the fixing of the guide rings (PARTNER model) or head runners (COMPACT).

For the COMPACT mast, another set of holes is present for the fixing of the end stops.

© FIRECO S.r.l. 2018

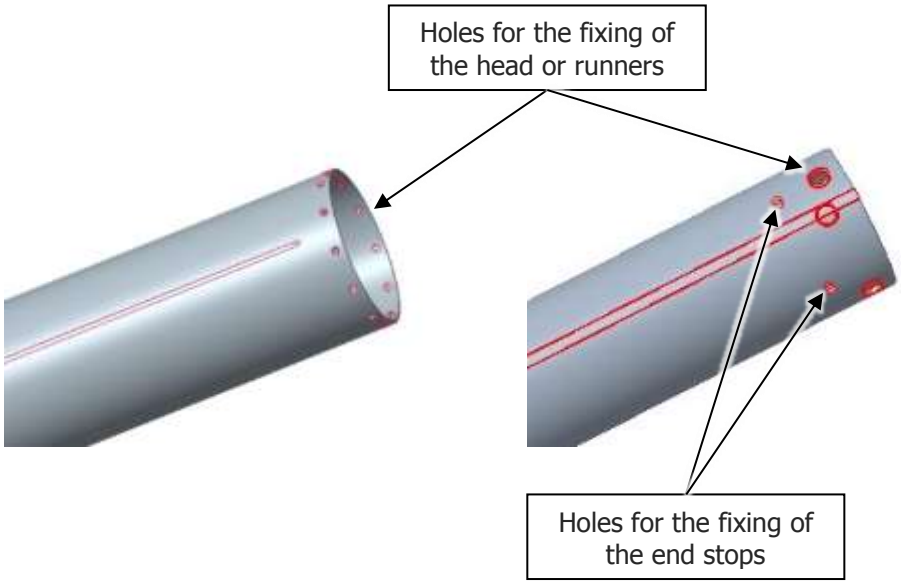

Figure 3-2.3: Grooves on the mobile tubes – Upper part of a mobile tube

The range of available tubes for the making of the MULTIFUNCTIONAL masts goes from a diameter of Ø250 to a diameter of Ø38.

Please see Table 3-2.1 for the various section diameter and thickness values of the tubes. Only some of the tubes reported in the table are used as main tubes.

Diameter [mm]	250	220	200	180	165	152	140	127	115	102	90	77	64	51	38
Thickness [mm]	6	6.5	5		4			3.5							

Table 3-2.1: Diameter and thickness of the tubes.

The MULTIFUNCTIONAL masts are classified, as regards the telescopic tubular structure, based on the diameter of the main tube and the number of sections, as shown in the following table.

Main tube diameter [mm]	250	200	152	115	90	77
Name	Giant	SuperHeavy	Heavy	Standard	Light	Ultralight

Table 3-2.2: Classification of MULTIFUNCTIONAL masts.

With the only exception of the top section or 1st mobile tube, all the mast tubes have a hole in their upper part to allow the outflow of rainwater when the mast is extended.

© FIRECO S.r.l. 2018

ANTI-ROTATION SYSTEM

The anti-rotation system prevents the rotation of the sections of the mast around their main axis. In the case of PARTNER model masts, the anti-rotation system consists of guiding keys that couple with the vertical keyways on the mobile tubes, thus preventing the latter from rotating. The guiding keys are attached to the respective external guiding rings and are aligned vertically. Between the rings and the mobile tubes there are guiding bands.

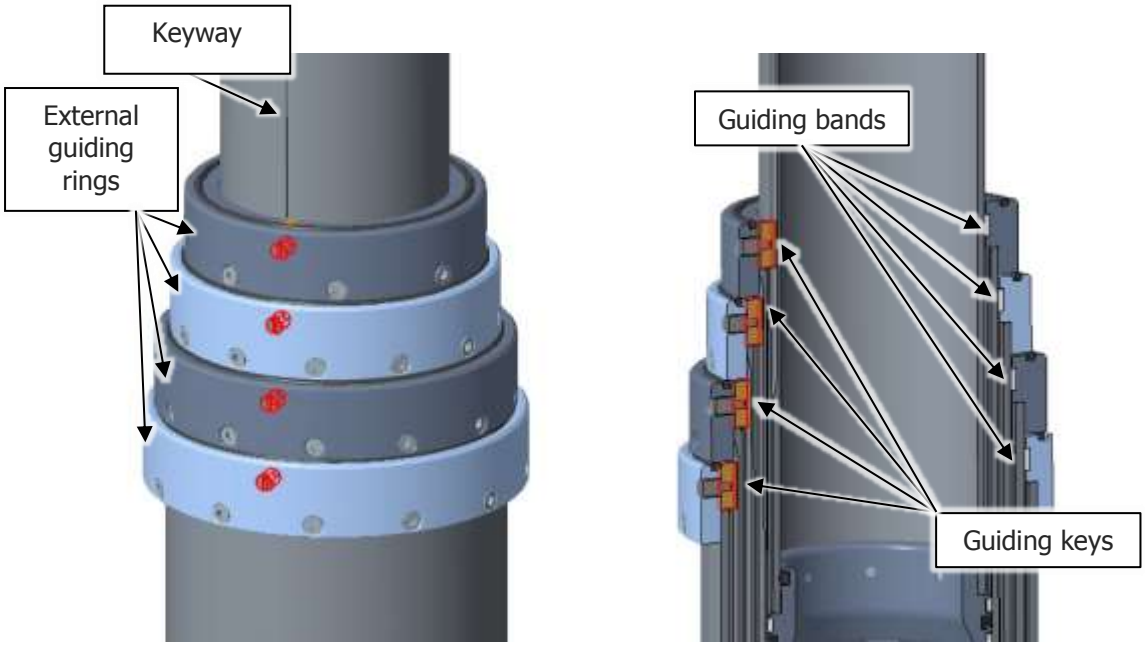

Figure 3-2.4: Anti-rotation – PARTNER Model

In the case of COMPACT masts, except for the main tube – which has a system similar to the PARTNER model masts – the anti-rotation system for mobile tubes consists of a set of internal runners made of a composite material (plastic and brass) that couple with the vertical keyways on the mobile tubes, thus preventing the latter from rotating. The runners are supported by shim bands (able to make up for any internal play) and are 90° offset from one another.

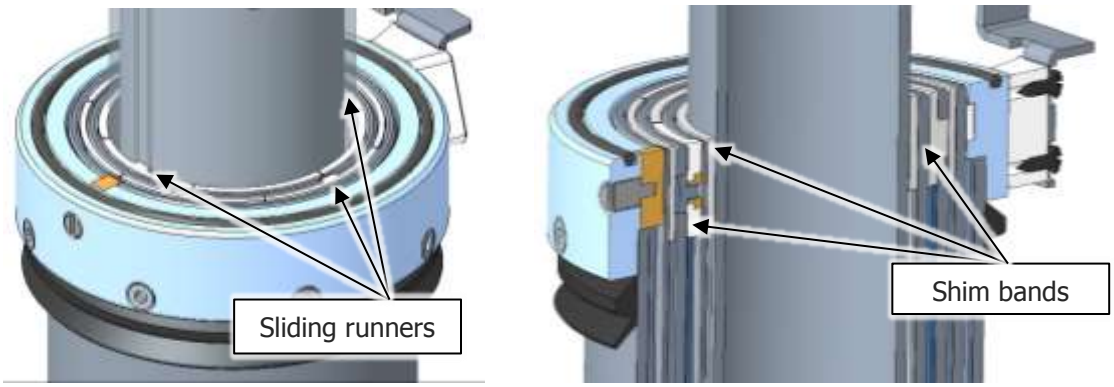

Figure 3-2.5: Anti-rotation – COMPACT Model

© FIRECO S.r.l. 2018

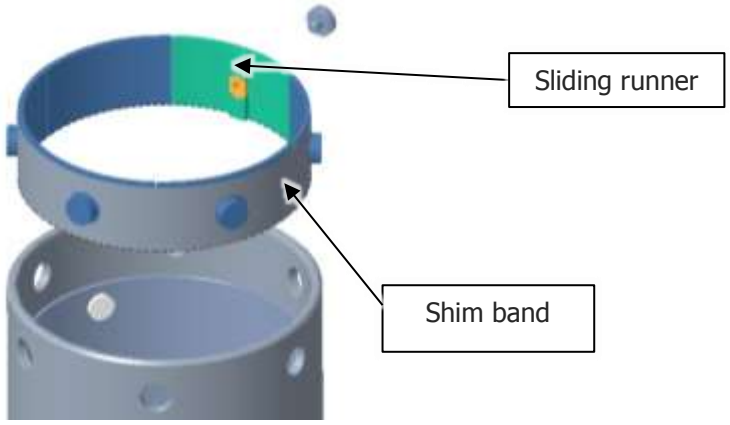

Figure 3-2.6: Anti-rotation – COMPACT Model (details)

PARTNER masts have grub screws which allow adjusting the pressure exerted by the guiding keys on the keyways. The ideal pressure value is set by the manufacturer and therefore no further adjustments from the customer's side are necessary.

COMPACT masts have adjusting grub screws exclusively on the external main tube.

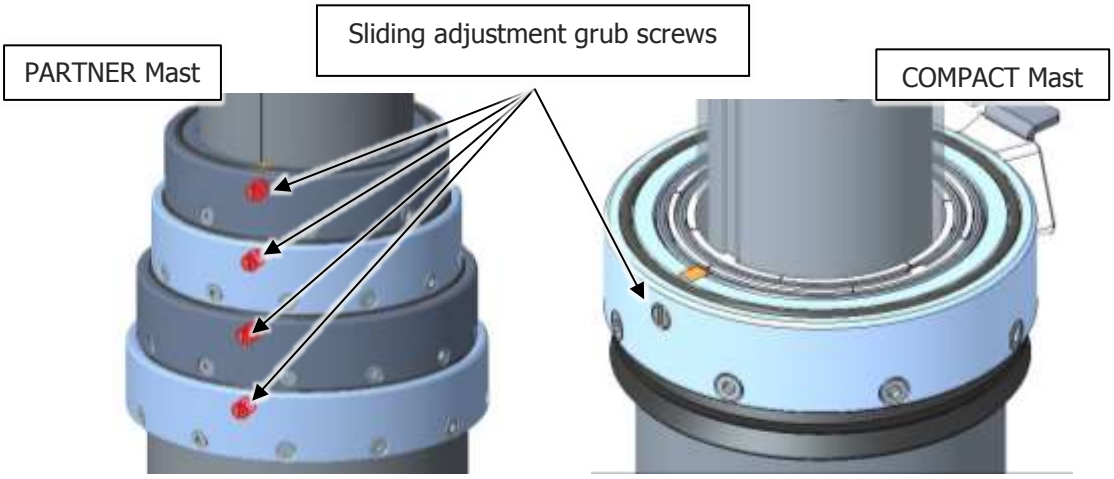

Figure 3-2.7: Adjustment grub screws

Because of their manufacturing characteristics, between the guide and the runner there is a minimum torsional play of 0.1° for each section of the mast.

STOP TUBES

The stop tubes are designed to stop the movement of their mobile sections and therefore ensure that a part of these remains inserted in the lower tube, so as to increase the mast stability and its wind resistance.

As for the PARTNER masts, each mast with *n* sections has *n-1* stop tubes, each of which is associated to its mobile tube.

Stop tubes are fixed to the upper part of the mast, inside the gaps between the various tubes. When the mobile section is fully extended, the stop tube is compressed between the mobile section piston and the corresponding external guiding ring.

© FIRECO S.r.l. 2018

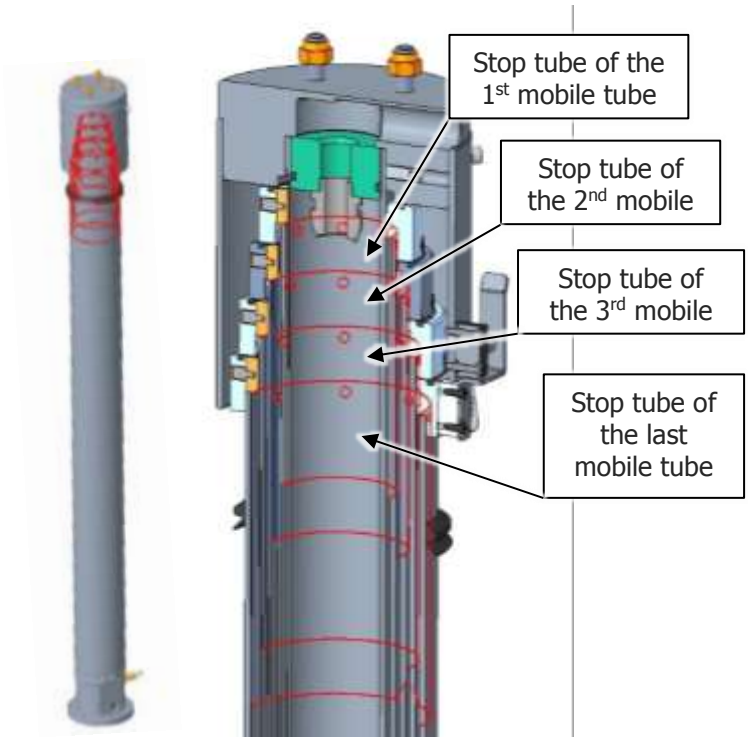

Figure 3-2.8: Stop tubes of a PARTNER mast

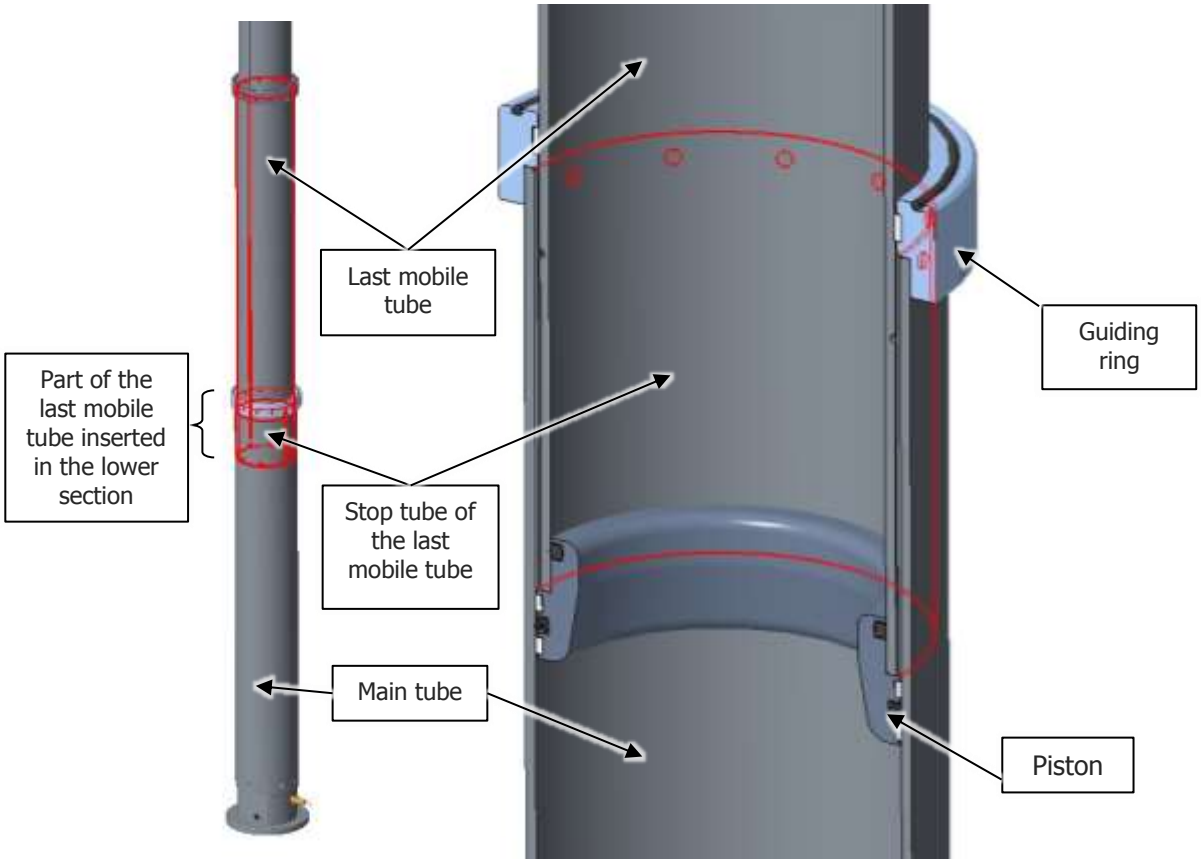

Figure 3-2.9: Stop tubes with the mast being extended - PARTNER model

© FIRECO S.r.l. 2018

COMPACT masts have two stop tubes: upper and lower.

The lower stop tube can be made of plastic or of a metallic material (aluminum).

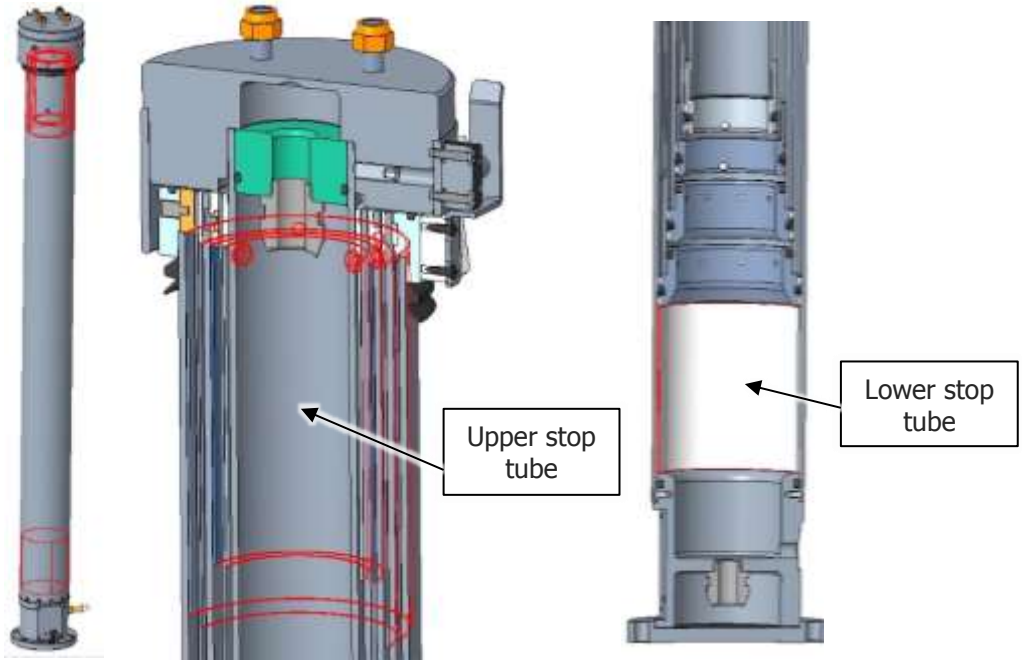

Figure 3-2.10: Stop tubes of a COMPACT mast

The upper stop tube is placed in the gap between the two tubes. When the mobile section is fully extended, the stop tube finds itself compressed between the piston of the mobile section and the corresponding internal anti-rotation system.

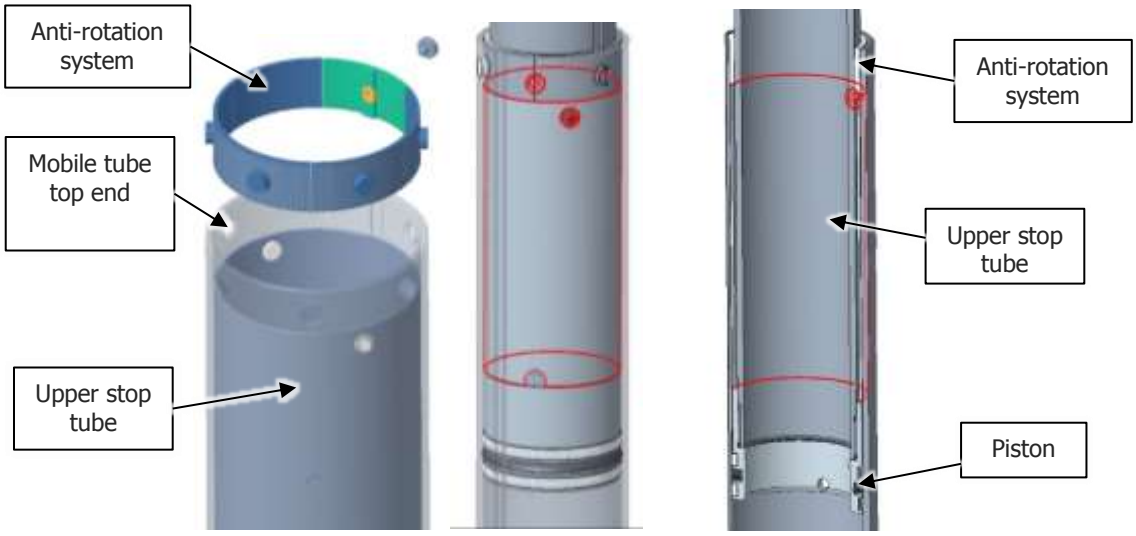

Figure 3-2.11: Upper stop tube with the mast being extended - COMPACT model

© FIRECO S.r.l. 2018

PISTONS

At the base of every mobile section is a piston that is designed to guide the section during its movement and to ensure there is no pressured air leakage from inside the mast.
Each piston is equipped with seals and bands made of polymeric materials, so as to reduce the friction between the piston and its enclosing tube.

For both COMPACT and PARTNER mast models, the system for the fixing of the piston to the lower part of the mobile tubes can be threaded, with radial screws or with hybrid systems.

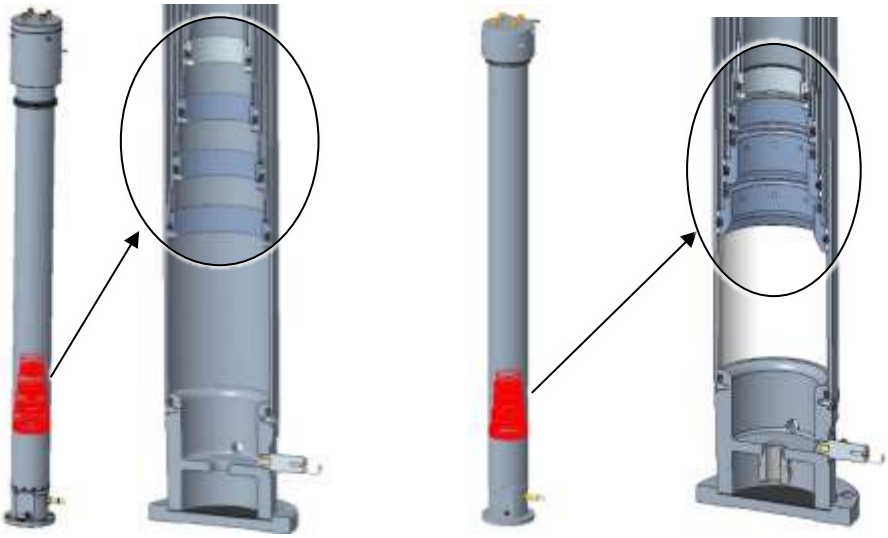

Figure 3-2.12: Examples of threaded (left) and hybrid (right) piston fixing systems

RAINWATER DRAIN HOLES

On each tube of the mast, except for the top mobile tube, there is a hole that allows the discharge of the rain water that accumulates in various gaps between one tube and the other. This will avoid the typical problems of usage during the winter time (possible ice formation and difficulties in the phases of extension and retraction of the mast).
The drain hole on the main tube is a ⅛" threaded Gas hole, while the drain holes on the mobile tubes are Ø6.5 holes.
You may want to install an extra drain tube (optional) so as for the rainwater stagnating inside the mast to be funneled and redirected to the desired destination. This option may be useful if the case the mast is installed inside a vehicle.

© FIRECO S.r.l. 2018

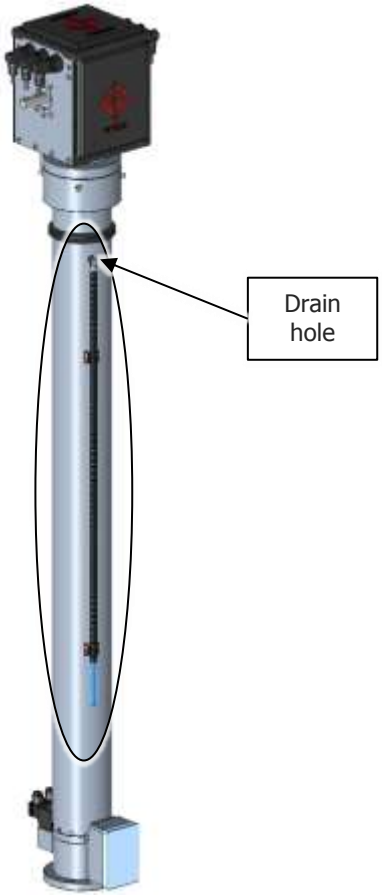

Figure 3-2.13: additional drain tube (optional)

When a mobile tube is fully extended, its piston is close to the water drain hole on the lower tube. In this way, you can let out all the water potentially present in the stop tube area.

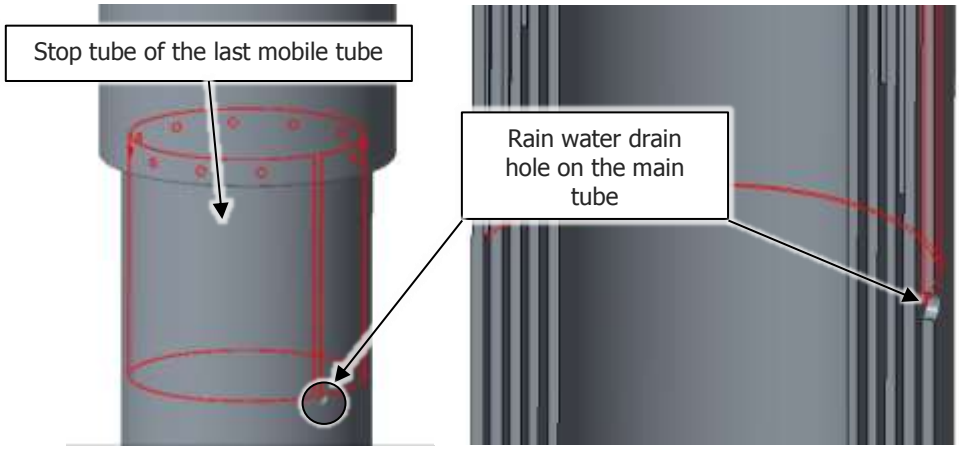

Figure 3-2.14: Rain water drain hole on the main tube - CLOSED mast

© FIRECO S.r.l. 2018

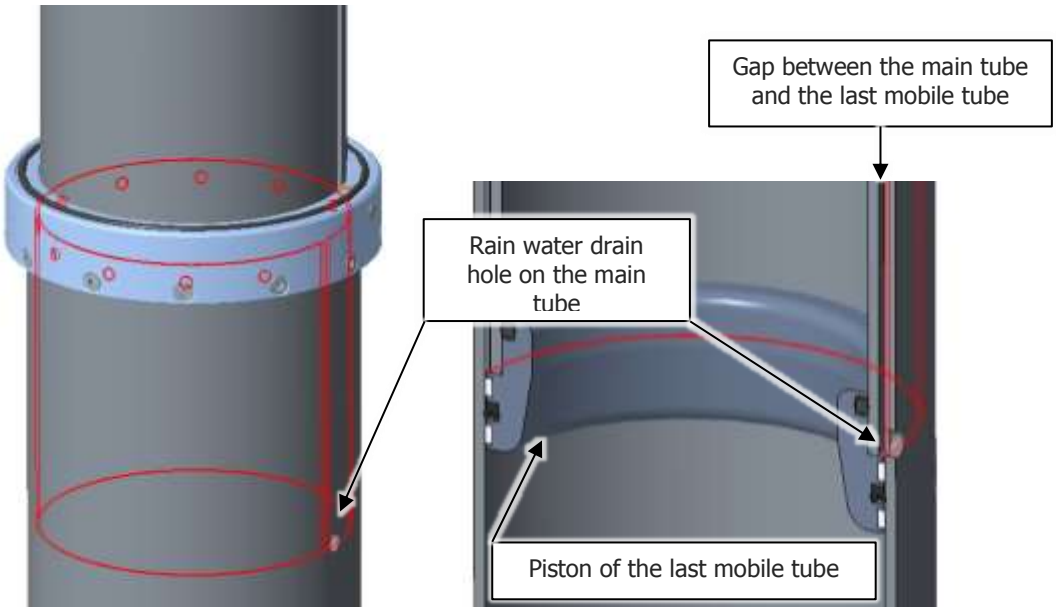

Figure 3-2.15: Rain water drain hole on the main tube - EXTENDED mast

FRAME MOUNTING HEAD

The frame mounting head, or simply "head", is fixed to the upper end of the top mobile tube, and allows the fixing of equipment on the top of the mast.

The mounting of the equipment onto the top takes place by means of four grub screws with nuts (see pos. **A** in the following figure).

There is a hole (**B**) to allow the supply cables to reach the equipment at the top. The hole can be made on the top surface or on the side, depending on your need.

A wedge device (**C**) acts as an anti-rotating device for the equipment at the top.

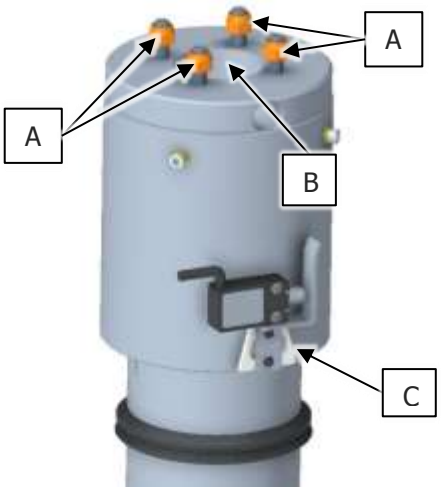

Figure 3-2.16: Head with holes

Please refer to paragraph 3-5 for further details on the installation of the equipment onto the top of the mast.

© FIRECO S.r.l. 2018

EQUIPMENT AT THE TOP

The equipment at the top is a MULTIFUNCTIONAL TILT AND TURN UNIT of the type:

- TT SPARK (2 or 3 motors), or
- TT HEAVY (3 motors).

Each motor carries out a different movement. 12V or 24V motors are available.

Based on the type of equipment purchased, you may:

- Move the left and right floodlight sets upwards or downwards, in a coordinated manner or independently.
- Switch on the floodlights either individually or in groups.
- Rotate the floodlight sets clockwise or counterclockwise.

The motors are housed inside the head's central body.

To the sides of the head's central body there will be either pins (in the case of TT SPARK heads) or flanges (if TT HEAVY heads) for the fixing of the lamp units.
A lamp unit consists of two floodlight sets placed on the opposite ends of the head's central body.
The lamp units operate at 12V, 24V or 220V and each of their sets can have one or more floodlights.

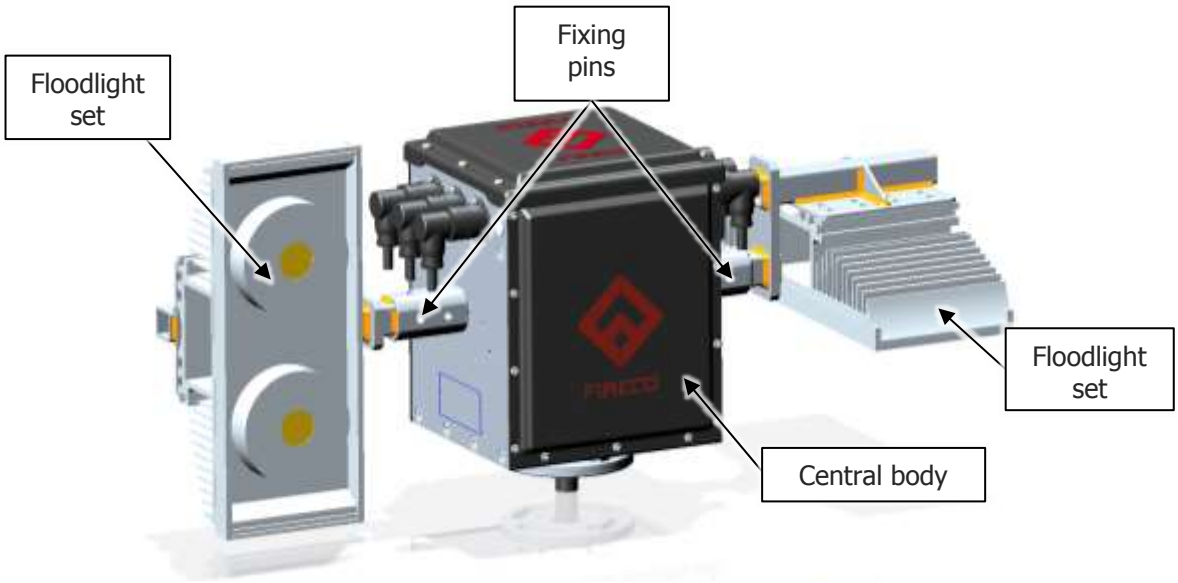

Figure 3-2.17: Example of TT SPARK multifunctional tilt and turn unit

© FIRECO S.r.l. 2018

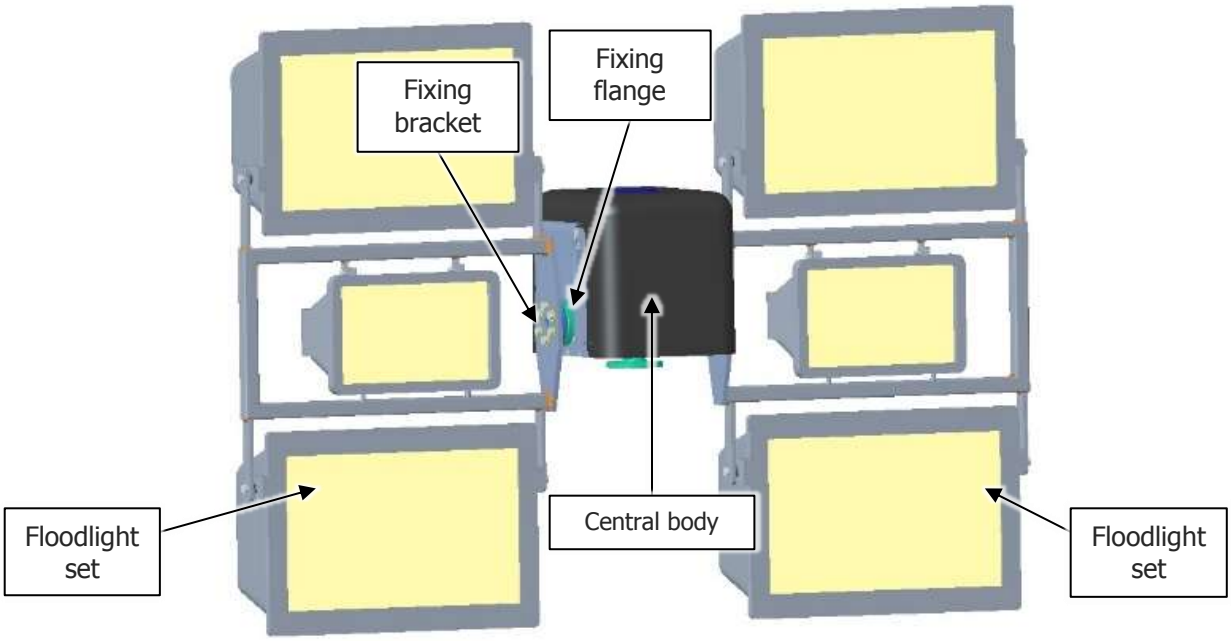

Figure 3-2.18: Example of a TT HEAVY multifunctional tilt and turn unit

BASE

At the lower end of the main tube is the base of the mast. This is the part of the mast that has to be rigidly secured to the lower flange.

Referring to the following image, the base has a flange (A) with a series of loop holes that allow for the physical connection of the mast to the lower support by means of threaded components. On the body of the base are also:

- (B) a ¼" Gas threaded hole for the air inlet and outlet (EV group)
- (C) a ¼" Gas threaded hole for the drain valve
- two holes: an internal loop one (D1) and a ½" Gas threaded external one (D2), for the passage of the electric wire inside the mast and for the fixing of the base terminal board.

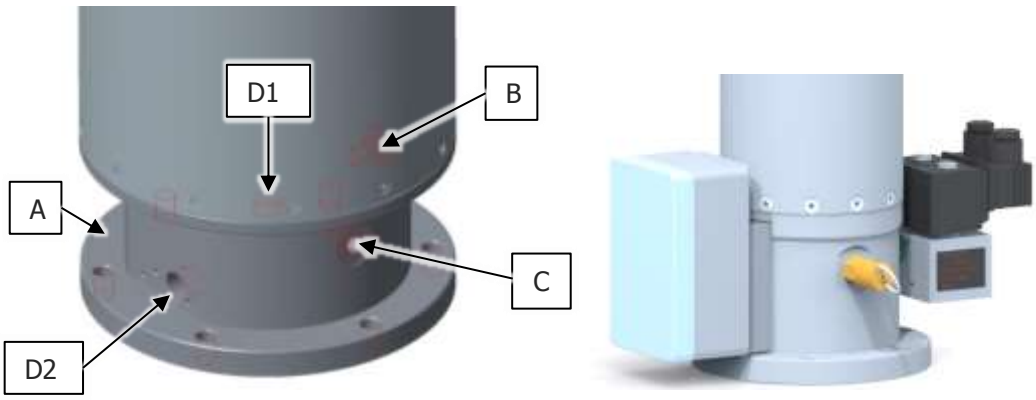

Figure 3-2.19: Mast with non-rotating base

© FIRECO S.r.l. 2018

ELECTRIC CABLE

The masts can be equipped with an internal electric cable to bring signals and/or electrical power to the equipment placed on the top of the mast.

The electric cable is pre-shaped in the shape of a spiral, so as to be able to fit in the mast when it is closed and to reach the necessary length when the mast is extended.

Figure 3-2.20: Coiled electric cable.

MAIN PNEUMATIC AND ELECTRO-PNEUMATIC COMPONENTS

The main pneumatic and electro-pneumatic components available on the machine are:

- solenoid valve set to control the extension/retraction of the mast (optional)
- discharge/drain valve to release the excess pressure and to discharge the condensate

Please see the attached connection diagrams for further details concerning the pneumatic and electro-pneumatic components.

SOLENOID VALVE SET

The solenoid valve set, if present, is placed at the bottom of the mast and controls the extension/retraction of the mast in conjunction with the control system.

Figure 3-2.21: Solenoid valve set at the mast base

© FIRECO S.r.l. 2018

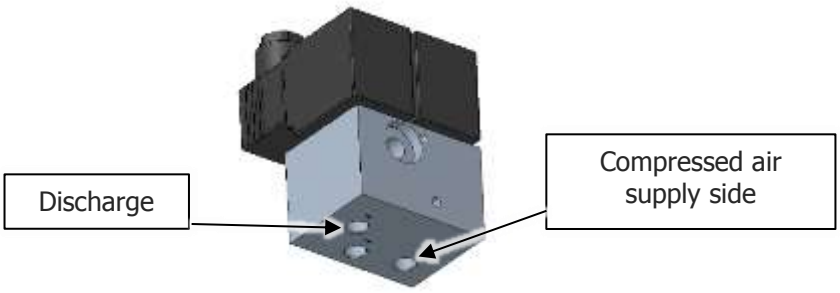

Figure 3-2.22: Solenoid valve set

If the mast is provided with a tank-less compressor, the solenoid valve set is not present, since the solenoid valve set is incorporated in the compressor itself.

DISCHARGE/DRAIN VALVE

At the base of the mast is a ¼" Gas threaded hole for the discharge/drain valve.

This allows the outlet of the excess air from within the mast when the internal pressure exceeds the maximum allowed pressure. However, this component is not a safety valve itself. In fact, if an excessive high-pressure airflow is led into the mast, the valve may not be able to release all the excess air.

To avoid any damage to the product, the Customer must comply with the inlet air limits provided.

Figure 3-2.23: Discharge/drain valve

As an option, the customer can require an additional drain tube to be connected to the discharge valve, so as to redirect the water drain, if, for example, the mast is installed inside a vehicle.

PNEUMATIC SUPPLY

The mast can be connected to different sources of pneumatic energy:

- an electric compressor (optional), or
- a supply line for compressed air (provided by the end user)

Electric compressors combined with the MULTIFUNCTIONAL mast can be of two types:

- with an accumulator tank (left below)
- without accumulator tank (right).

© FIRECO S.r.l. 2018

Figure 3-2.24: Examples of electric compressors

Typically, compressors provided with an accumulator tank are needed in case of masts with large diameters, which require higher and constant air flow rates.

If the mast is provided with a tank-less compressor, the solenoid valve set is not located at the base of the mast, since the solenoid valve set is incorporated in the compressor itself.

The connection to the electric compressor or to the compressed air supply must comply with the instructions given in chapter 4-6.

For further details, please refer to the compressor use and maintenance manual, which is provided as an attachment to this manual,

3 ENVIRONMENTAL CONDITIONS

Generally, the machine is suitable to operate in environments:

- that are at an altitude not exceeding 1500m a.s.l.;
- that have a temperature between -40°C and +60°C;
- in which relative humidity is between 30% and 95%, not higher than 50% at 40° C, not higher than 90% at 20° C.

NOTE:

Some electric compressors or multifunctional tilt and turn units may require different environmental conditions.

Check with FIRECO Srl the ideal operating conditions for the mast purchased.

WARNING

It is prohibited to use the machine in explosive/corrosive/extremely dusty environments or locations at risk of fire.

© FIRECO S.r.l. 2018

4 TECHNICAL DATA

The technical characteristics are shown in ANNEX A in the appendix of this manual.

WARNING

Since the characteristics may vary for each mast model, it is necessary to verify the correspondence of the serial number found on the mast with the one reported on the manual.

© FIRECO S.r.l. 2018

4 INSTALLATION

The installation of the machine must be carried out by qualified and properly trained personnel, in accordance with the instructions below.
Should any deviation from the described installation conditions be necessary, contact the manufacturer.

WARNING
During the installation, demarcate the area surrounding the mast by keeping unassigned staff off.

In order to preserve the health and safety of our employees, we recommend the use of the P.P.E. as follows:

- protective gloves
- safety footwear
- body protections
- safety helmet

If in doubt, please contact FIRECO S.r.l.

1 HAULING AND HANDLING

For hauling, it is recommended that the operators always use means capable of withstanding the weight and size of the machine in such a way as to avoid damage to the machine and to persons or things around.
During hauling, the machine and its components must be packed and suitably locked to the means of transport in order to avoid damage or loss of stability.

WARNING
FIRECO S.r.l. does not account for failures or any malfunction of the product resulting from poor transport conditions that do not comply with the guidance provided in this paragraph.
Failure to comply with the instructions contained in the manual will result in the decay of the product warranty.

© FIRECO S.r.l. 2018

WARNING

FIRECO S.r.l. is not liable for any damage caused to persons, animals and goods for the use of lifting systems different from those indicated.

Make sure you have fully understood the indications in this paragraph.

WARNING

During the transport of the mast mounted on the vehicle, movements or displacements of the equipment located on the mast may cause damage to the vehicle.

Block or remove the equipment before you move the vehicle.

The overall weight of the product (with or without its original packaging) does **not** allow hauling the product by hand by one or more persons. It is therefore mandatory to proceed to cargo handling using suitable mechanical lifting tools.

WARNING

Always use lifting accessories and means that are certified, with adequate capacity and that have undergone regular maintenance.

Verify the weight of the machine and its components before carrying out any operation.

WARNING

Always haul the mast and its components in a horizontal position.

WARNING

Be sure to always haul the mast in its closed position.

WARNING

Always check the weight balance of the machine, to prevent unexpected movement or the fall of the load.

HAULING OPERATION ASSESSMENT

Upon delivery of the machine, check:

- that the packaging and the parts of the machine are intact;
- the supply corresponds to the order specifications;
- there is no visible and immediately recognizable damage.

In the case of damage, defects or other general problems, immediately inform FIRECO Srl.

© FIRECO S.r.l. 2018

HAULING WITH THE ORIGINAL PACKAGING

Unless special requests have been made, the hauling is carried out as follows.

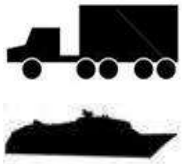

If you intend to transport the product by land vehicles and aircraft, the packaging of the product itself will be made of cardboard with pallets.

If you intend to transport the product by ship, the packaging of the product itself will be made of wood.

The machine comes divided into different units packed on pallets. Usually, the separate packages are as follows:

- mast set, with main body of the pre-mounted multifunctional tilt and turn unit
- accessories set (lamps)
- electric compressor (if provided)
- unsorted components set (flanges, fixing brackets, etc.)

Lift the various packed units using a forklift equipped with two forks so as to support the package on two sides

HAULING WITHOUT THE ORIGINAL PACKAGING

Once unpacked, the various parts of the machine must be handled as follows.

Depending on the order specifications, the machine is supplied disassembled into the following main units:

- mast set, with main body of the pre-mounted multifunctional tilt and turn unit
- lamp units
- compressor (if provided)
- unsorted/bulk components

Handling of the mast set, with the main body of the pre-mounted multifunctional tilt and turn unit

Lift the set by means of an overhead or jib crane with adequate capacity or by a forklift equipped with two forks.

© FIRECO S.r.l. 2018

Lift the load, preferably from two sides, as shown in

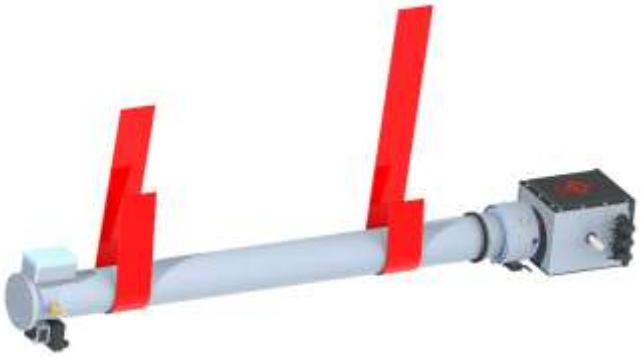

Figure 4-1.1.

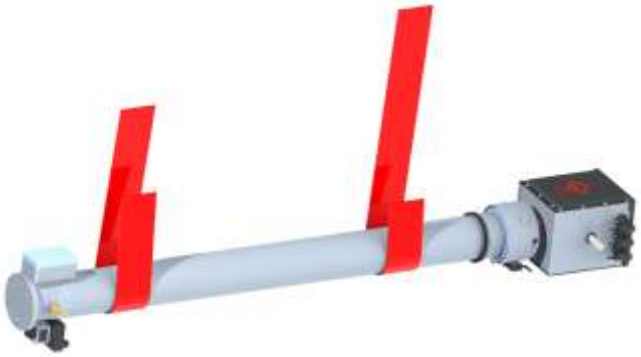

Figure 4-1.1: Grip points of the mast – horizontal

For the vertical lifting, refer to

Figure 4-1.2: Attach the straps or the lifting means under the fixed collar.

© FIRECO S.r.l. 2018

Figure 4-1.2: grip points of the mast – vertical

WARNING

The mast must NEVER be lifted by fixing the lifting accessories to the mobile tubes or the mobile rings or to the multifunctional tilt and turn unit, so as to avoid damaging the components.

Handling the lamp units

The lamp units' weight can range from 3kg to 75kg.

Lift the various lamp units separately.

Lifting by hand by a single person is allowed up to 15 kg. For weights greater than 15 kg, use suitable lifting means (jib cranes or overhead-travelling cranes with adequate capacity).

Depending on the lamp units model, support the load on one or two areas, as shown in the examples in Figure 4-1.3.

Always check the weight balance of the lamp units, so as to prevent unexpected movement or the fall of the load.

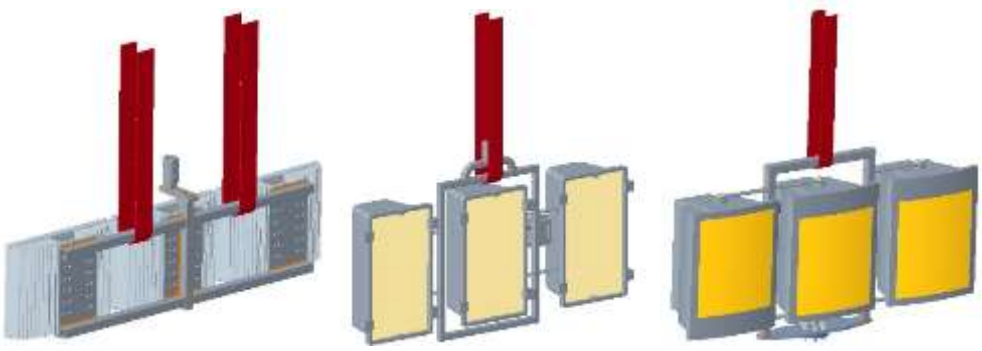

Figure 4-1.3: Main multifunctional head grip points.

Compressor handling

© FIRECO S.r.l. 2018

The lifting of the compressor (if provided) can be done by hand, using the handles.

2 STORAGE

In case of inactivity, the machine must be stored with the following precautions:

- Store the machine in a closed place;
- When finished using it, always set the mast to a vertical position to prevent damage (heating up or crushing) of the seals;
- Protect the machine from impacts and stresses;
- Protect the machine from humidity;
- Ensure that the machine is not exposed to extreme temperatures and protect it from serious thermal excursions;
- Prevent the machine from being in contact with corrosive substances.

3 ARRANGEMENTS

ARRANGEMENTS FOR THE INSTALLATION

For the installation, it is necessary to prepare a maneuvering area that is adequate for the mast dimensions and for the chosen lifting means.
The arrangement of the machine must be carried out in such a way as to achieve the optimum ergonomics and safety in the workplace: manage to leave sufficient room for the operations of maintenance and adjustment around the machine.

ELECTRICAL ARRANGEMENTS

It is the user's responsibility to provide the machine with an adequate power source.
Depending of the equipment purchased, it is necessary to provide power supply to the electric compressor and/or to the connection point at the base of the mast, as shown in paragraph 4-6.
The power supply required for the functioning of the machine can vary according to the equipment purchased (12V, 24V or 230V).

If not supplied with the compressor, the end user must provide a power supply insulating device.

The machine is supplied without emergency stop controls.
It is up to the end user to possibly implement and make use of such a device at the electric supply source.
The machine power supply must come from a line protected against overcurrent and against possible insulation faults.

© FIRECO S.r.l. 2018

It is the installer's responsibility and obligation to provide the installation site with a grounding system in compliance with the provisions in force in their own country or in the country of destination. This provision should be performed by qualified and specialized personnel and comprise at least:

- a grounding system in accordance with the provisions of the user's country;
- what is necessary for the correct and perfect installation in accordance with the laws and technical safety standards for workplaces and electrical installations.

WARNING

These arrangements are always at the expense of the user and they are also the user's full responsibility.

WARNING

The manufacturer shall not be held responsible for damages to persons, animals and goods, caused by the non-compliance with this provision.

PNEUMATIC ARRANGEMENTS

In the absence of an electric compressor, it is necessary to provide the connection to a suitable pneumatic line.

WARNING

The pneumatic air supply source must not be greater than **2,5 bar**.

The incoming air must be free of grease and humidity. It is up to the end user to implement a suitable filter upstream of the solenoid valve set.

4 PLACING

In order to guarantee a correct positioning, it is recommended that you perform the mounting operations on a horizontal surface and check, with the appropriate measuring instruments, the uprightness of the mast at the end of the mounting operations.

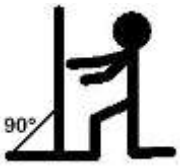

Please see paragraph 2-2 for further details.

WARNING

During the mast extension operations, contact with electrical wires and/or suspended structures might be possible, with consequent danger for the operators.

Check thoroughly for the possible presence of power lines and/or suspended structures around the mast installation area.

DO NOT INSTALL THE MAST DIRECTLY BELOW THE POWER LINES, EVEN IF THEY SEEM TOO HIGH TO BE REACHED BY THE MAST.

© FIRECO S.r.l. 2018

5 MOUNTING

WARNING

Before proceeding to the assembly and installation of the mast, the customer must make sure that the packaging includes all the components listed below:

- Telescopic MULTIFUNCTIONAL mast and other parts of the machine (compressor, lamp units, etc.)
- Supports for the fixing of the mast;

FIRECO S.r.l does not provide washers, screws and bolts for the fixing of the mast.

WARNING

The assembly and installation operations of the product shall be the customer's responsibility, who will take care of these activities, through the use of qualified and adequately trained technical personnel.

The customer has to make sure that anyone in charge of mounting and installing the product has the necessary information and the proper training, in order to preserve their own and others' safety.

Before commencing the product installation, the operator has to have read this publication carefully and have acquired solid knowledge of it.

WARNING

FIRECO S.r.l. does not account for failures or any malfunction of the product resulting from incorrect assembly and installation.

Failure to comply with the instructions contained in the manual will result in the decay of the product warranty.

The assembly and installation of the product must take place in an environment that is adequately equipped and lit.

PRELIMINARY INSTRUCTIONS FOR THE MAST ASSEMBLY

For the proper functioning of the mast, it has to be mounted by specialized personnel and using appropriate and well-kept equipment.

WARNING

For the mounting of the mast we recommend to use only brackets supplied by FIRECO S.r.l. and to fix them on a strong and stable structure. However, should a use of different fixing means be expected, contact the manufacturer for the necessary verifications and authorisations.

© FIRECO S.r.l. 2018

WARNING

Make sure that the structures designated to the anchoring of the mast are solid enough to safely bear the loads listed in the catalog or the ones defined by the manufacturer.

For the correct fixing of the mast to the supporting structure (fixed structure, vehicle, field structure) we recommend to provide at least **two fixing points**: one at the base of the mast (lower fixing) and one near the fixed collar (upper fixing).

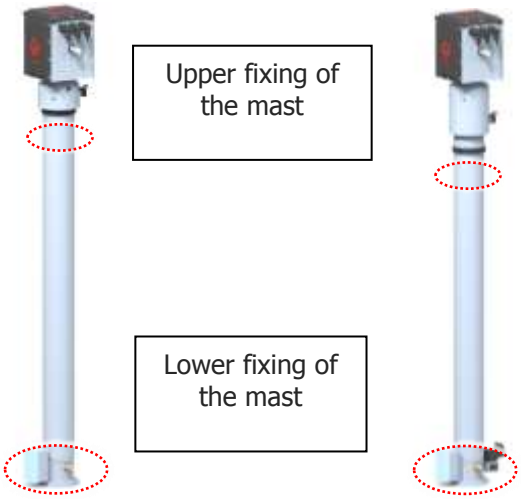

Figure 4-5.1: fixing points of the mast

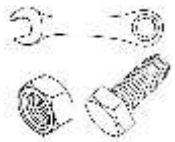

It is recommended that the customer use hardware equipped with locking systems, such as self-locking nuts, double nuts, thread locking fluids etc.
We recommend using STAINLESS STEEL A2/A4 screws with tensile strength equal to or greater than 700 MPa (N/mm2) - A2 - 70 or A4 - 70 according to UNI EN ISO 3506.
We recommend using STAINLESS STEEL A2/A4 nuts with tensile strength equal to or greater than 700 MPa (N/mm2) - A2 - 70 or A4 - 70 according to UNI EN ISO 3506.

Tighten all the fixing bolts with the appropriate pair, which depends on the class, size and on the possible anti-corrosion treatments on the screws, making sure you follow a tightening sequence such as to not compromise the structural tightness of the bracket or of the mounting surface (examples in Figure 4-5.2).

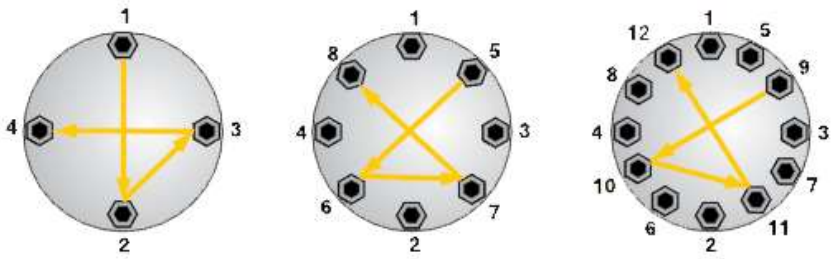

Figure 4-5.2: examples of tightening sequences

© FIRECO S.r.l. 2018

Depending on the installation options chosen and applicable to your configuration, please refer to the following paragraphs.

The upper and lower fixing elements must be aligned so as to respect the allowed max. verticality of the mast (90°).

It is the installer's responsibility to provide appropriate regulating and error recovery devices upon installation. Once installed, the mast must **be compliant with the max. verticality allowed** for the mast (90°), also considering the maximum slope of the chosen site due to the very installation or to the vehicle limitations.

Do not install accessories on the main tube that might cause an ovalisation of this tube and thus lead to a malfunctioning of the mast.

LOWER FIXING WITH BASE FLANGE

1.	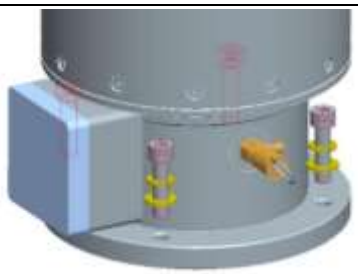	Secure the mast base flange directly onto a suitable surface. The support surface must be flat and provided with holes whose quantity and size are appropriate for the coupling. Fix the base flange to the mounting surface using screws. As for the number and the size of the screws, please refer to the attached drawings.

LOWER FIXING WITH SHELF-TYPE MOUNTING DEVICE

1.		Fix the mounting device on a suitable vertical surface. The support surface must be flat and provided with holes whose quantity and size are appropriate for the coupling. As for the number and the size of the screws, please refer to the attached drawings.
2.	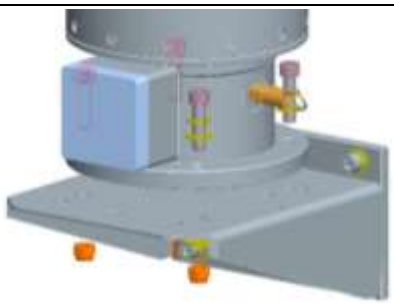	Fix the base flange of the mast to the lower fixing device by using screws. As for the number and the size of the screws, please refer to the attached drawings.

© FIRECO S.r.l. 2018

UPPER FIXING WITH WALL COLLAR MOUNTING DEVICE

1.

Fix the rear part of the device on a suitable vertical surface.

The support surface must be flat and provided with holes whose quantity and size are appropriate for the coupling.

Fix the collar using screws.

As for the number and the size of the screws, please refer to the attached drawings.

2.

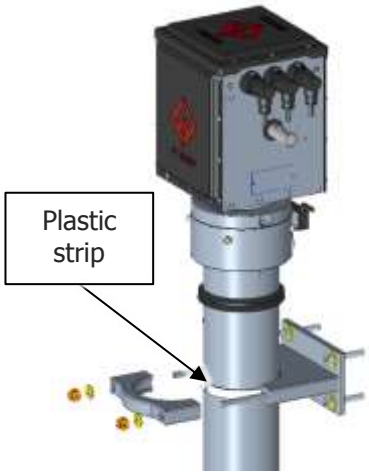

Place the mast and install the front part of the collar, by inserting the plastic band between the mast and the collar.

The seat is located on the inside of the collar.

Tighten the two parts of the flange using the nuts provided.

3.

In the case it was explicitly requested upon order placing, the mast includes a V-ring seal gasket.

Lower the V-ring gasket until it reaches the wall bracket.

WARNING!

On the main tube of the mast, near the guide ring, there is a 1/8" Gas threaded hole for the discharge of rainwater. Be careful **not to block the hole** with the wall collar.

© FIRECO S.r.l. 2018

UPPER FIXING WITH ROOF BRACKET

1.

Place the mast inside the vehicle compartment and secure it before placing the roof flange.

2.

Mount the two parts of the roof bracket onto the main tube of the mast, putting the plastic strip in between the tube and the bracket; the proper slot is on the inner side of the roof bracket.

Tighten the two parts of the flange using the screws provided.

3.

Fix the roof bracket onto the horizontal surface by using proper screws. As for the number and the size of the screws, please refer to the attached drawings.

4.

If the upper fixing with roof flange is provided, installing a V-ring gasket will be necessary.

Lower the V-ring gasket until it reaches the roof bracket.

WARNING!

On the main tube of the mast, near the guide ring, there is a 1/8" Gas threaded hole for the discharge of rainwater. Be careful **not to block the hole** with the roof collar.

© FIRECO S.r.l. 2018

INSTALLING A LAMP UNIT

Usually, the main body of the multifunctional tilt and turn unit comes already installed on the mast.
It is up to the end user to only install the lamp unit composed of two floodlight sets.
Install the lamp units only after fixing the mast by means of its mounting systems.
The mast must be completely closed and insulated from any energy sources.
Use suitable means of access (not provided) to reach the installation point.
By means of using a suitable lifting system where necessary (see instructions on handling the lamp units in section 4-1), move each floodlight set to the installation area placed on the main body of the multifunctional tilt and turn unit.
Pre-direct the floodlight sets as needed and taking into consideration the overall size of the vehicle.
Disconnect the lifting system (or release the lamp units) only after fixing the flooglight sets.

Depending on the type of multifunctional tilt and turn unit (TT SPARK or TT HEAVY), follow one of the two procedures below.

TT SPARK

The main body of a TT SPARK multifunctional tilt and turn unit has two mounting pins, one to each of the opposite ends of the unit, to facilitate the mounting of the floodlight sets.

Figure 4-5.3: Fixing pins – TT SPARK

Each floodlight set, coupled with a TT SPARK multifunctional tilt and turn unit, has a fixing bar with a quick coupling.

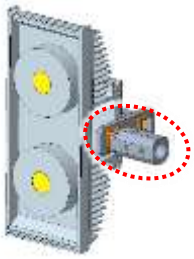

Figure 4-5.4: Fixing bar with quick coupling – TT SPARK floodlight set

© FIRECO S.r.l. 2018

Direct the floodlight set as needed. In the case of the TT SPARK multifunctional tilt and turn unit, you may adjust the orientation by steps of 90°.

Figure 4-5.5: Possible TT SPARK floodlight set orientations

Slide the fixing bar with quick coupling onto the fixing pin, aligning the grubs with the holes.

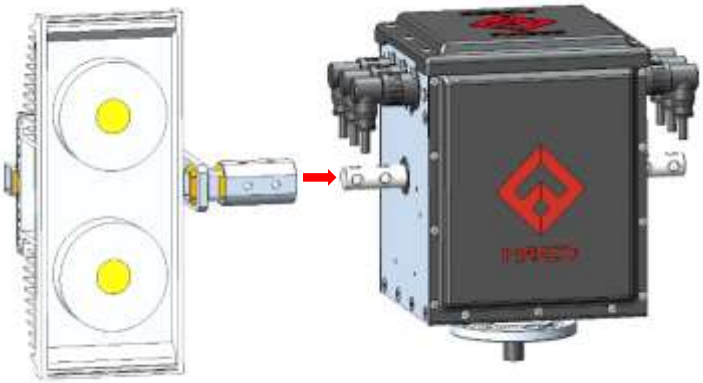

Figure 4-5.6: TT SPARK lamp units installation

Secure the floodlight set in the desired position by tightening the 4 grubs.
Repeat the process for the second floodlight set.
The electrical connection between the main body of the multifunctional head and the floodlights will be carried out with the help of quick connectors at the floodlights' cable ends.
The number of quick connectors may vary depending on the characteristics of the floodlight sets.

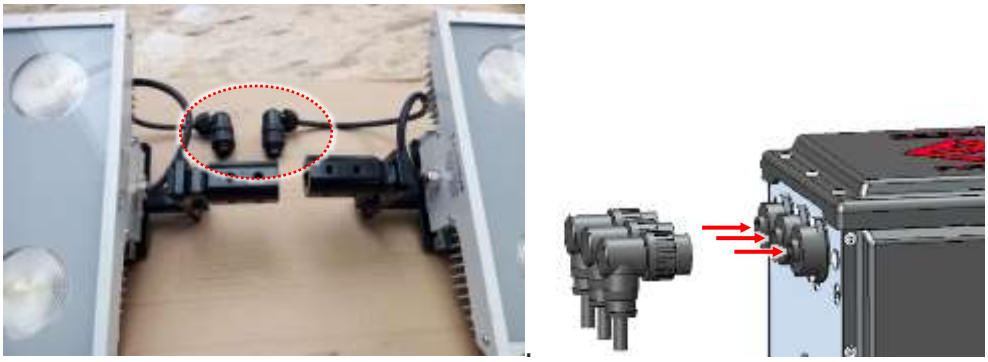

Figure 4-5.7: TT SPARK floodlight sets electrical connection

© FIRECO S.r.l. 2018

TT HEAVY

The main body of a TT HEAVY multifunctional tilt and turn unit has two mounting flanges, one to each of the opposite ends of the unit, to facilitate the mounting of the floodlight sets.

Figure 4-5.8: Mounting flanges to the sides – TT HEAVY

Each floodlight set for TT HEAVY multifunctional tilt and turn units has a fixing bracket with 6 screws.

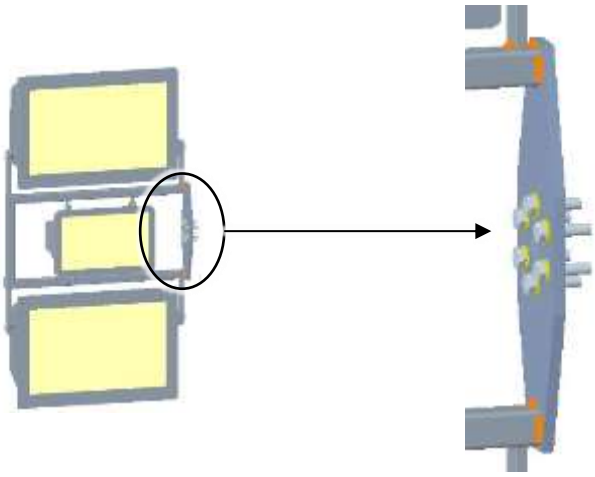

Figure 4-5.9: Fixing bracket with screws - TT HEAVY lamp units

Direct the floodlight set as needed. For the TT HEAVY multifunctional tilt and turn unit, the floodlight set's orientation can be changed by steps of 60°.

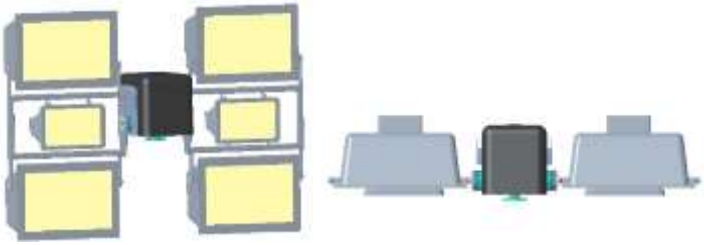

Figure 4-5.10: Some possible orientations of the TT HEAVY lamp units

© FIRECO S.r.l. 2018

Connect the floodlight set's fixing bracket to the mounting flange on the main body, aligning the screws with the holes. On the fixing bracket there is a pin that facilitates the centering of the set.

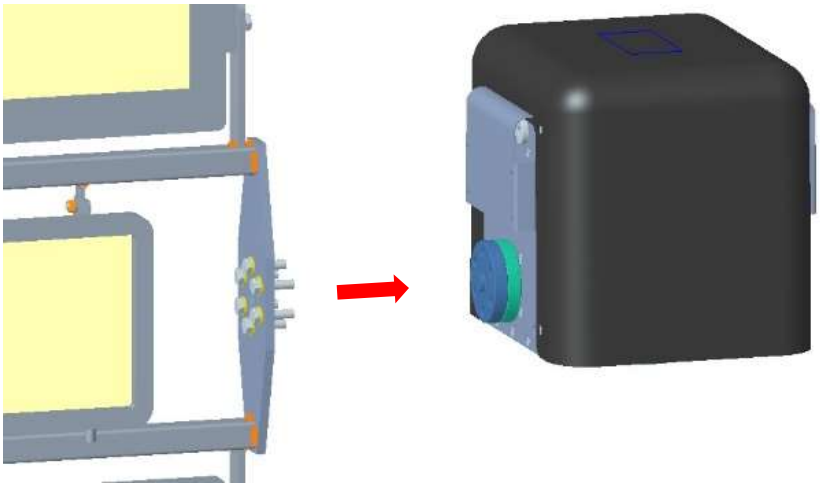

Figure 4-5.11: TT HEAVY lamp units installation

Secure the floodlight set in the desired position by tightening the 4 screws.
Repeat the process for the second floodlight set.

The electrical connection between the main body of the multifunctional head and the floodlights will be carried out by connecting the cables coming out of the head's main body to the terminal blocks on the back of the floodlights.
The number of connection cables may vary depending on the characteristics of the floodlight sets.

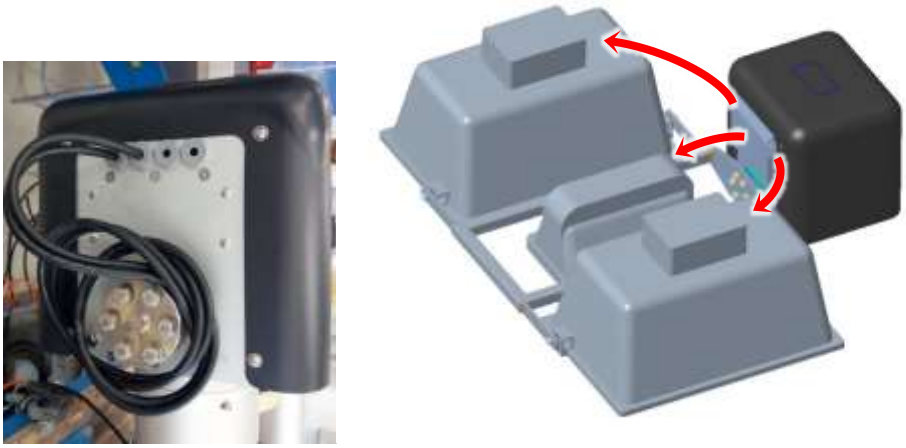

Figure 4-5.12: TT HEAVY lamp units electrical connection

© FIRECO S.r.l. 2018

MOUNTING THE RAINWATER DRAIN TUBE

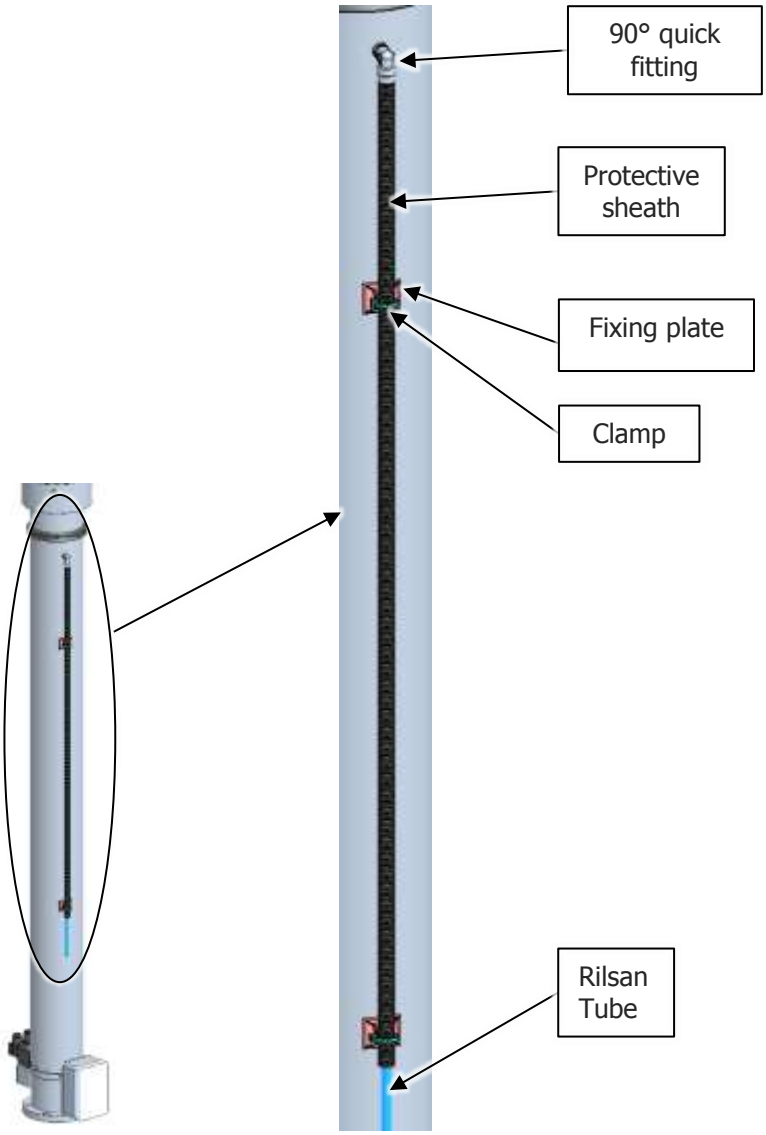

Figure 4-5.13: Rainwater drain tube

The drain hole on the main tube is a Gas 1/8" threaded hole.

Connect the 90° quick fitting provided by FIRECO to the threaded hole on the main tube of the mast.

NOTE:

If you do not use the FIRECO quick fitting, please use a threaded fitting that does not exceed 4 mm.

Insert the Rilsan tube into the 90° quick fitting.

Set the protective cover around the Rilsan tube.

Glue the fixing plates to the main tube of the mast, spacing them based on the length of the drain tube.

Firmly connect the drain tube to the fixing plates using cable ties.

© FIRECO S.r.l. 2018

PREPARING SIGNAL MANAGEMENT

The mast is designed for managing signals coming from the outside, which can:

- Start the automatic restore of the mast
- Stop the mast from working

Moreover, a signal from the upper limit switch is also available, which shows when the mast is extended/not fully retracted.
The signals may or may not be implemented, based on the usage needs of the customer.
The cables carrying the various signals must be connected to the terminal board located at the base of the mast according to the wiring diagrams provided in the annex.

6 CONNECTIONS TO THE ENERGY SOURCES

The connections from the machine to the energy sources must be carried out by the customer's qualified personnel and in absence of electrical power.

Follow the instructions on the arrangements provided for in paragraph 4-3.

Depending on equipment purchased, the machine's electrical and pneumatic connection (the wiring between components and the power source) can be done in several ways.
Connect the machine to its energy sources according to the following simplified diagrams and to the connection diagrams provided in the annex.

LEGEND:

- Electrical power source
- Electrical wiring
- Pneumatic energy source (other than a compressor)
- Pneumatic connection
- P Solenoid valve group
- E Terminal box at the bottom of the mast

For further details, please refer to the compressor use and maintenance manual, which is provided as an attachment to this manual,

© FIRECO S.r.l. 2018

NO ELECTRIC COMPRESSOR

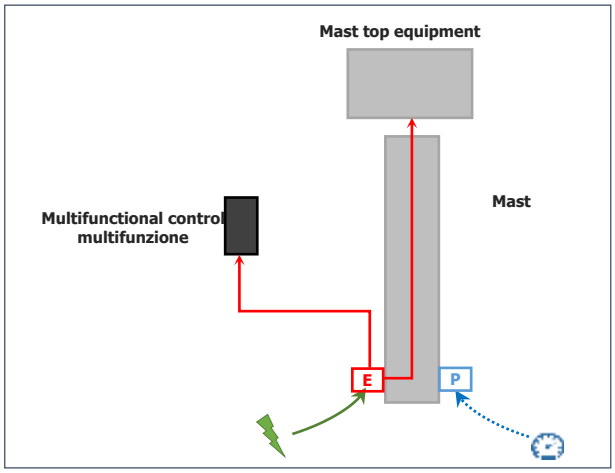

In the absence of an electric compressor, you must:

- feed the terminal block at the bottom of the mast with electrical power
- feed the mast with pneumatic power, connecting the pneumatic line to the solenoid valve group at the base of the mast

The pneumatic connection between the pneumatic line and the solenoid valve group is done by means of a super quick fitting for ø8 Rilsan tubes (not supplied).

Figure 4-6.1: Super quick coupling for ø8 Rilsan tubes (not supplied).

WITH ELECTRIC COMPRESSOR WITH ACCUMULATOR TANK

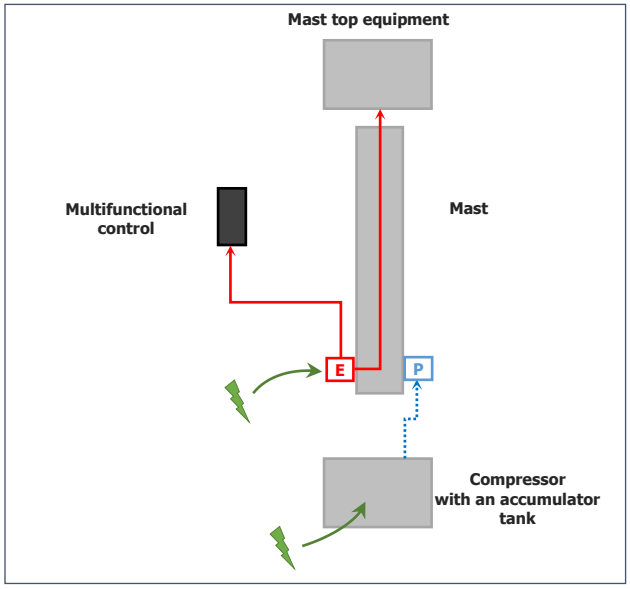

© FIRECO S.r.l. 2018

In the presence of an electric compressor with an accumulator tank, it is necessary to:

- feed the compressor with electric power
- feed the terminal block at the bottom of the mast with electrical power
- plug the compressor electrically to the terminal box at the bottom of the mast
- connect the compressor pneumatically to the solenoid valve group at the base of the mast

The pneumatic connection between the electric compressor with an accumulator tank and the solenoid valve group is done by means of a super quick fitting for ø8 Rilsan tube (not supplied).

WITH ELECTRIC COMPRESSOR WITHOUT ACCUMULATOR TANK

In the presence of an electric compressor without an accumulator tank, it is necessary to:

- feed the compressor with electric power
- feed the terminal block at the bottom of the mast with electrical power
- plug the compressor electrically to the terminal box at the bottom of the mast
- connect the compressor pneumatically to the mast (direct connection with no solenoid valve group)

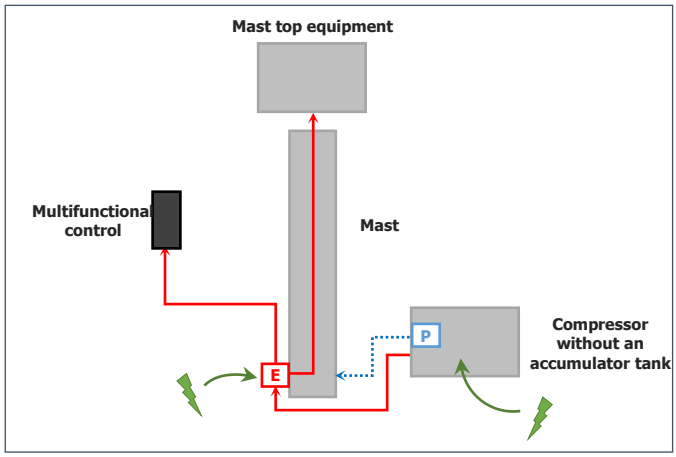

The pneumatic connection between the compressor and the mast group is done by means of a super quick fitting for ø8 Rilsan tube (not supplied).

GROUNDING

Connect the grounding wire to one of the fixing screws of the mast base bottom.

The other end should be connected to the vehicle chassis or to another grounding point, as per end user's arrangement.

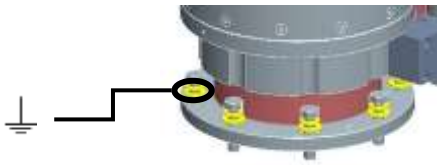

Figure 4-6.2: Grounding

© FIRECO S.r.l. 2018

7 PRELIMINARY CHECKS / COMMISSIONING

Before starting the machine, it is necessary to perform a series of checks and inspections in order to prevent errors and accidents:

- check all security systems;
- check the signs;
- check that external energy sources comply with the required specifications;
- verify the correct connection of all the external energy sources, paying special attention to the network electric polarity;
- verify that the pneumatic connections are tight enough so as not to cause dangerous leaks;
- verify that the machine has not suffered any damage upon assembly;
- check thoroughly for the integrity of the operator panels, the cables and the pipes;
- make sure no objects have been inadvertently left on the machine, or that no persons or materials are hindering normal operation.
- verify the free movement and free rotation of all the moving parts.

Please refer to chapter 5 for more details on using the machine.

© FIRECO S.r.l. 2018

5 USE OF THE MACHINE

1 WARNING

WARNING!

Before using the machine, it is essential to have read and understood all of the instructions in this manual.

In order to preserve the health and safety of workers, we recommend using the following P.P.E.:

- protective gloves
- safety footwear
- body protections
- safety helmet

WARNING

During the preparation and the use of the mast, unpredictable residual risks might persist. In order to preserve health and safety, delimit the area surrounding the mast by keeping unassigned staff off.

WARNING

During the hauling on a vehicle, the mast should be completely closed.

The top equipment has a wedge that prevents the rotation of the head.

It may be necessary to place further additional supports under the lamp units in order to further improve the stability of the mast.

WARNING

When the mast is being extended or retracted, do not move or start the vehicle on which it is installed. The vehicle must be still and blocked (hand brake up).

© FIRECO S.r.l. 2018

WARNING

During the mast extension operations, contact with electrical wires and/or suspended structures might be possible, with consequent danger for the operators.

Check THOROUGHLY that no power lines and/or suspended structures are around the mast installation area or around the positioning area of vehicle on which the mast is installed.

DO NOT HANDLE THE MAST IF IT HAS BEEN PLACED DIRECTLY BELOW ELECTRICAL LINES, EVEN IF THEY SEEM TOO HIGH TO BE REACHED BY THE MAST.

WARNING

Mast extension and closing operations may cause limb crushing.

Supervise the mast during the operations of extension/retraction. Make sure you have full visibility on the machinery operated.

Keep at a proper distance and do not touch the mast during its extension or retraction.

WARNING

Due to the effect of the load installed on the mast or the weather conditions in which it operates, the mast could turn over.

It is mandatory to position the mast in a way so that it has a tilt angle to the vertical axis that is not greater than the maximum angle declared by the manufacturer (90°).

For further guidance refer to the limits of use listed in paragraph 2-2.

WARNING

If you experience an unusual sliding of the sections (intermittent or non-regular movements), immediately stop the mast operation. Check for the absence of any obstacles or any tangled cables that may prevent the mast from working properly. If the problem persists, see paragraph 5-4.

Verify that all the pneumatic connections are active and in good working order.

The pressure delivered by the pneumatic energy source must not exceed 2.5 bar.

If you detect a value different from 2.5 bar, please contact FIRECO Srl: there may be failures or malfunctions in the pneumatic mast.

© FIRECO S.r.l. 2018

2 CONTROL SYSTEM

The control system of the MULTIFUNCTIONAL pneumatic mast consists of a MULTIFUNCTIONAL CONTROL.

The following additional control and adjustment devices are also provided:

- Solenoid valve group (if provided)
- Discharge/drain valve

MULTIFUNCTIONAL CONTROL

The multifunctional control allows managing, using a single device, all of the features of the machine: the extension/retraction of the mast and the top equipment (turning on the lamps and moving the lamp units).

There are several types of multifunctional controls, which can be categorized in 3 VERSIONS:

- wired
- wireless/radio
- smart

Figure 5-2.1: Multifunctional control examples

The WIRED multifunctional control is connected to the terminal box at the base of the mast by means of a cable.

The RADIO multifunctional control is wireless and works exclusively via radio controlling. The radio multifunctional control runs on batteries.

The SMART multifunctional control is powered by rechargeable batteries, so it can be used either in cable mode (with power cable being connected) or in radio mode (with power cable being disconnected).

When connected to the power cable, the SMART multifunctional control can be charged and it operates as a normal wired multifunctional control. If disconnected from the power cable, the SMART multifunctional control automatically turns on the radio mode.

The working range of multifunctional controls that have a radio mode is about 20m. Any obstacles between the control and the mast may limit such range.

Some multifunctional controls have a backlit keyboard, so as to ensure controls' readability in low light conditions. The backlight automatically turns off after 10 seconds of inactivity.

© FIRECO S.r.l. 2018

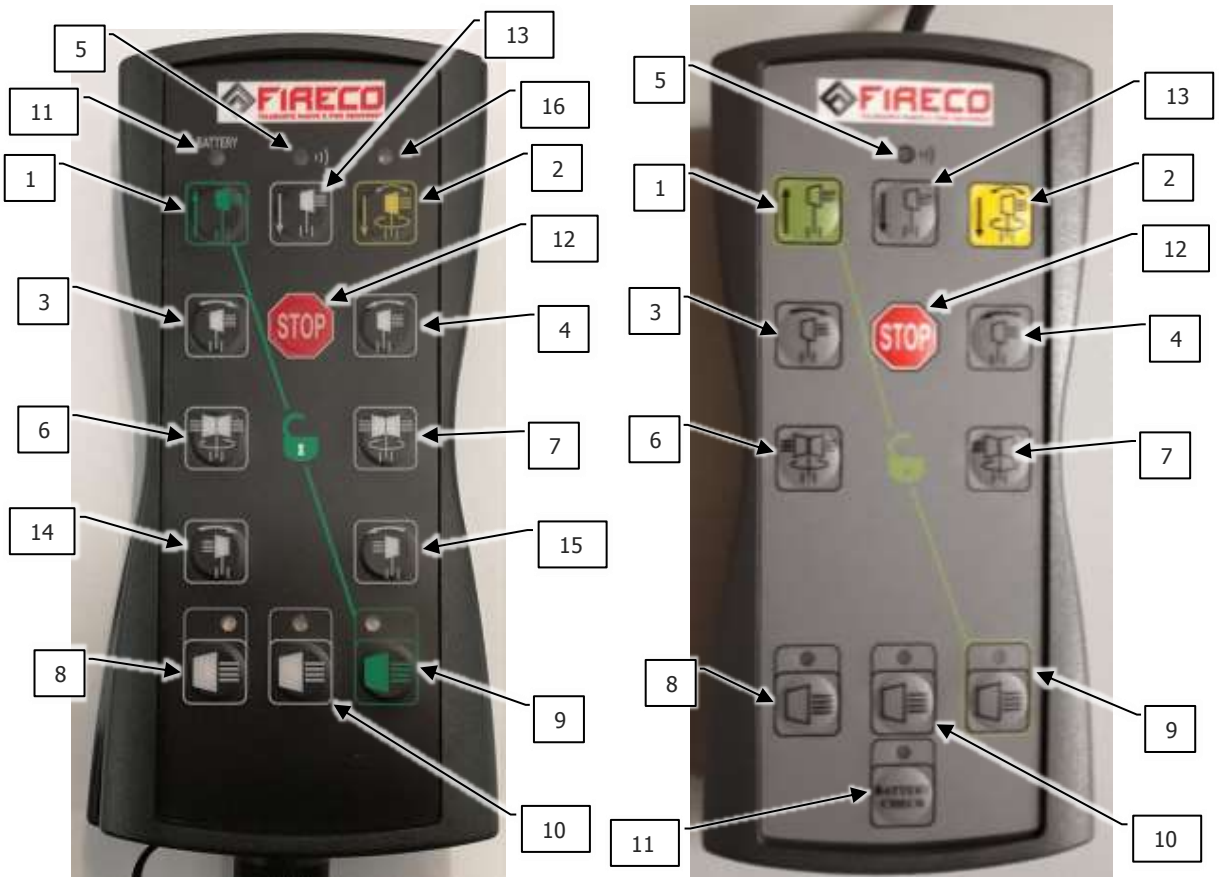

Command ID	Description
1	Keypad unlock command (together with ID 9 command), for the enabling of the mast movements After unlocking this command, the mast extension is activated (hold-to-run).
2	Mast automatic restore command (return to home position): after pressing this button, the lamps will be switched off, the top equipment will return into the space-saving initial position and the mast will start retracting.
3 and 4	Command for tilting the lamps of a lamp unit up and down Hold-to-run control
5	Indicator for the command signal visual check / LED RF transmission
6 and 7	Command for the clockwise/counterclockwise rotation movements of the multifunctional tilt and turn unit Hold-to-run control
8, 9 and 10	Command for the switching on/off of the floodlights Depending on customers' requests these buttons can turn on the lamps in different group configurations and with different operating modes (still or flashing light).
9	Keypad unlock command (together with ID 1 command), for the enabling of the mast movements
11	"Power test" button (in the SMART version) and respective LED "battery state"
12	Emergency stop button This button will stop immediately the automatic restore procedures launched by the command ID 2.
13	Command for the mast retraction (closing) Hold-to-run control
14 and 15	Command for tilting the lamps of a lamp unit up and down Hold-to-run control
16	Sensor for lighting conditions in the surroundings

Figure 5-2.2: Generic multifunctional control keys description

© FIRECO S.r.l. 2018

KEY COMBINATIONS AND SPECIAL FEATURES

Auto-learning

The auto-learning procedure of the SMART and RADIO multifunctional controls is only necessary in the case the multifunctional control is being replaced or shipped at a later date in respect to the rest of the machine.

To activate the frequency auto-learning procedure, power up the system and, within 20 seconds, press and hold the green and the yellow keys (ID 1 and 2 in Figure 5-2.2) for 5 seconds.

The successful conclusion of the procedure is indicated by the flashing of the leds on the push buttons (ID 8, 9 and 10).

Enabling the ascent (extension) of the mast

To enable the ascent (extension) of the mast, it is necessary to simultaneously press the two green buttons (ID 1 and 9 in Figure 5-2.2).

Enabling lamp sets activation

Until the mast has been extended to a safe height, all lamp sets control operations are disabled.

Normally, it is necessary to extend the mast upwards for at least 7 seconds, even if not continuous. Such value may vary depending on the type of mast used.

Please contact the manufacturer to know what your configuration is.

NOTE:

Once the mast has been extended, even if it is turned off and back on, the software detects that the mast has been left extended, and therefore it is enabled to receive commands. Therefore, it is not necessary to either press the unlock buttons or wait for 7 seconds.

Automatic control deactivation

SMART and RADIO multifunctional controls will disable the keyboard automatically after 30 seconds of inactivity. Press any key to activate or reactivate the functions.

Battery features

Push the button ID 11 (Figure 5-2.2) in order to carry out the power test (in the case of the SMART remote controls) o control the LED light to verify the battery charge state.

- Led off: the batteries are charged or the system has no power
- Led flashing: low battery
- Led on: the power cable is connected and batteries are charging

The full battery charge cycle (from zero) can last about 4 hours.

On the SMART multifunctional control, battery charging occurs automatically when the control is connected to the power cable. To maximize the control life, it is recommended to keep it connected to the power cable when not in use.

© FIRECO S.r.l. 2018

A known issue of rechargeable batteries is the self-draining: leaving batteries unused for a certain period of time causes a chemical reaction resulting in the battery draining. Such period of time varies depending on several factors, including temperature and humidity.

OTHER CONTROL AND ADJUSTMENT DEVICES

SOLENOID VALVE SET

On the solenoid valve set (if provided) are two screws:

- one allows adjusting the air inlet into the mast during the mast extension
- the other one allows adjusting the air outlet from the mast while the mast is closing.

Figure 5-2.3: Solenoid valve adjustment screws

DISCHARGE/DRAIN VALVE

Figure 5-2.4: Discharge/drain valve

The valve can be operated manually by pulling the appropriate ring either to release the air from the mast or to drain the condensation that might have formed inside the mast, or to manually close the mast.

WARNING

Manually closing the mast by means of release/discharge valve is to be considered an extraordinary procedure and must be actuated exclusively in case it is impossible to resort to the normal control system and in absence of pneumatic power supply. Please see the paragraph on the operating instructions and the relevant safety instructions.

To **securely open the discharge/drain valve**, pull the ring outwards and, at the same time, loosen the valve head counterclockwise.

To **securely close the discharge/drain valve**, pull the ring outwards and, at the same time, tighten the valve head clockwise. A spring will set the valve back into place.

© FIRECO S.r.l. 2018

3 USE PROCEDURES

EXTENDING THE MAST

By reference to the description of the control system provided for in paragraph 5-2:

- Adjust the airflow and pressure, if needed
- Enable the mast extension
- Operate the extension control of the mast until the latter reaches the desired height.

CLOSING THE MAST

By reference to the description of the control system provided for in paragraph 5-2:

- Adjust the airflow and pressure, if needed
- Start the automatic restore of the mast
- Alternatively, perform the set-aside the mast according to the following steps:
    - Turn off the lamp units
    - Operate the head movements until the machine reaches a configuration of minimal encumbrance, also considering any obstacles or restrictions present
    - Operate the mast retraction control until the mast reaches the desired height.

USING THE EQUIPMENT ON TOP

Activate the functions provided for the equipment on top by installing and using the controls described in paragraph 5-2).

CLOSING THE MAST MANUALLY

WARNING

The following procedure is to be considered extraordinary and must be actuated exclusively in case it is impossible to resort to the normal control system and in absence of pneumatic power supply.

- Check for the absence of persons and/or obstacles that may hinder the closing of the mast and its equipment on top
- Reach the discharge valve placed at the base of the mast.
- Pull the discharge valve **slowly** to start the air discharge and therefore the retraction of the sections.
- The closing speed can be adjusted by pulling the discharge valve further or closer outwards.
- Avoid locking the valve in its open position to better manage the closing speed.

© FIRECO S.r.l. 2018

4 DIAGNOSTICS AND TROUBLESHOOTING

WARNING

Any diagnostics and troubleshooting maintenance operation must be performed by qualified technicians and/or trained staff to avoid compromising the equipment functionality and the operators' safety.

WARNING

Unless otherwise specified, diagnostics and troubleshooting operations are allowed only after insulating the machine from its sources of energy.

If you need to carry out operations while the machine is supplied with electrical energy, all precautions required by safety standards must be taken to operate in the presence of dangerous voltage, under direct control authorized by the maintenance manager. In particular, operators will have to be qualified as "experts" in accordance with standards EN 50110-1:2014 (Europe), NFPA 70E:2018 (USA) or CSA Z462:2018 (Canada), depending on the country of installation.

WARNING

Upon work completion, restore and properly secure all the protections and guards that may have been removed, opened and/or disabled.

WARNING

In the event of a malfunction in the mast, it is recommended that you carefully read the tables in the following paragraphs.

Failure to comply with the guidance provided in this chapter, which may lead to compromise the product's functionality, shall give rise to the revocation of any form of warranty on the product itself.

Before requesting the manufacturer's service, please read the following paragraphs.

On page 734 is a diagnostic procedure performed by the mere interpretation of the led indicators. This procedure is designed to help identify the main causes of failure or to find which component of the machine is not working properly (solenoid valves set, motors, communication errors, feed issues, etc.).

Some of the problems that might arise may not be resolvable through fast and simple operations, but may be determined by faults that require extraordinary maintenance operations, causing the product to be inoperative for a long time.

Please consult the manufacturer for defects and/or malfunctions of the machine that are not described in this manual or that remain unresolved even after its consultation.

© FIRECO S.r.l. 2018

DIAGNOSTICS VIA LED INDICATORS

WARNING

The led indicator inspection on the electronic board must be carried out by maintenance technicians who are qualified in accordance with standards EN 50110-1:2014 (Europe), NFPA 70E:2018 (USA) or CSA Z462:2018 (Canada), depending on the country of installation, since such procedure requires opening the electric box while the machine is powered on, thus creating risks of direct contact with parts under tension.

The machine is equipped with led indicators that are useful in the diagnosis of malfunctions.
The led indicators start blinking 2 seconds after the malfunction has occurred.
The led indicators stop blinking only after the issue has been resolved.
The led indicators are located:

- On the multifunctional control
- On the electronic board inside the TT unit

The following procedure shows in an exemplary way how to gain access to the electronic board of a multifunctional tilt and turn unit TT SPARK.
To have access to the electronic board of the TT unit it is necessary to unscrew and remove the cover of the unit (pos. **A** in the figure below).
After that the electronic board is directly accessible.

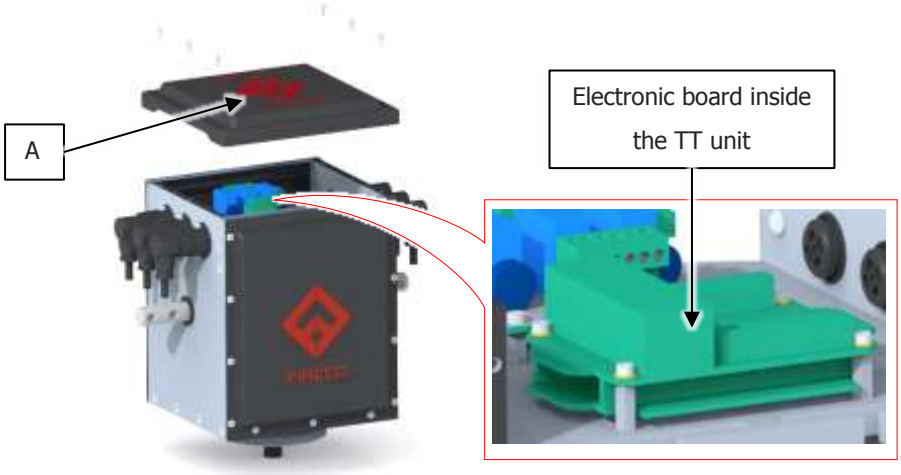

Figure 5-4.1: Accessing the electronic board of the equipment on top

LED INDICATOR ON THE MULTIFUNCTIONAL CONTROL

The multifunctional control shows the following led indicators (see figure below): LED 1 and LED 2.

Figure 5-4.2: LED indicator on the multifunctional control

- LED 1 indicates any short in the solenoid set or in the multifunctional tilt and turn unit motors. In the event of a short in the motors, it is possible to detect in which engine the failure occurred by pressing the A, B or C keys. The LED corresponding to the engine that failed will light up.
- LED 2 indicates any connection issues in the solenoid set or in the multifunctional tilt and turn unit motors circuit. If the LED flashes when the mast is closed, it means that there is a problem with the solenoid valve. If the LED flashes when the mast is extended, there is a problem with the motors.

LED INDICATORS ON THE REMOTE CONTROL, "SMART" TYPE

The following indications are valid only for remote controls of the SMART type.

The red LED fort he RF transmission (command ID 5 in Fig. 5-2.2) can be found in the conditions described in the table below.

LED	Meaning	Possible solution
Switched on continuously	The continuous lighting of the LED signals the transmission of commands, whenever one of the command buttons is pushed.	• If this LED should not light up when any button on the remote control is pushed, please check the power supply on the connecting plug and/or check if the internal battery is connected.

© FIRECO S.r.l. 2018

LED	Meaning	Possible solution
Switched on discontinuously (flashing light)	The LED lights up with longer intervals (flashing light), when a wireless connection between the remote control and the main board is about to be established.	• If this LED should not flash, when you push the 2 buttons for the establishment of a wireless connection, please check one after the other the correct functioning of these 2 buttons.
Fast flashing light	If the LED lights up with shorter intervals (fast flashing light), this means that there is some anomaly in the wireless or wired communication.	WIRED mode • If it is properly powered, it means that the main board is off • If the main board is on, there may be a wiring problem: check the wiring of the RS485's conductor pair and verify that the keyboard charging power source has the same power supply as the main board. WIRELESS/RADIO mode • It may not be paired with a base, repeat the pairing procedure • The paired main board is off • The main board is out of reach • The main board was incorrectly paired with another keyboard, repeat the pairing procedure • There seems to be a problem with the radio communication module of the keyboard or the paired base
Off	Normal state of the LED in the absence of pressed keys	• If you are performing an RF pairing operation, the led may be off once the pairing is finished (and the 3 yellow LED lamps are all on) • If pressing a key won't turn the LED on, check the power on the connector and/or check if the internal battery is connected

Fig. 5-4.3: SMART Multifunction Control – RF Transmission Led

The battery status led (ID11 key in Figure 5-2.2), which may be red, orange, or green, can be found in the statuses described in the following tables.

SMART Multifunction Control – Wireless/Radio Mode (Cable Disconnected)		
LED	**Meaning**	**Possible Solution**
OFF	When the keyboard is in standby mode, the led is off.	• If you press a key and that LED stays off, the battery is fully drained. Recharge. • If you press a key and that LED stays off, check if the internal battery has disconnected
STABLE GREEN LIGHT	It means that the battery is fully charged.	• The battery does not need charging.
STABLE ORANGE LIGHT	It means that the battery is partially charged.	• The remaining battery life still provides several hours of operation.
STABLE RED LIGHT	It means that the battery is low.	• We recommend connecting the keyboard power cord so that it can be recharged.

Fig. 5-4.4: SMART Multifunction Control – Battery Status LED

SMART Multifunction Control – Cable Mode (Cable Connected)		
LED	**Meaning**	**Possible solution**
OFF	No power from the cable	• Check the cable connection.
STABLE GREEN LIGHT	Battery is fully charged.	
FLASHING ORANGE LIGHT	Battery is charging.	
FLASHING RED LIGHT	Problem with the internal battery.	• Disconnect the power cord and check that the internal battery is connected • Disconnect the power cord, disconnect the battery for a few seconds, reconnect it and try reconnecting the cable • Damaged battery. It needs replacing.

© FIRECO S.r.l. 2018

LED INDICATOR ON THE ELECTRONIC BOARD OF TILT AND TURN UNIT

The electronic board of the tilt and turn unit shows the following LED indicators (see Figure below): LED X, LED Y and LED Z.

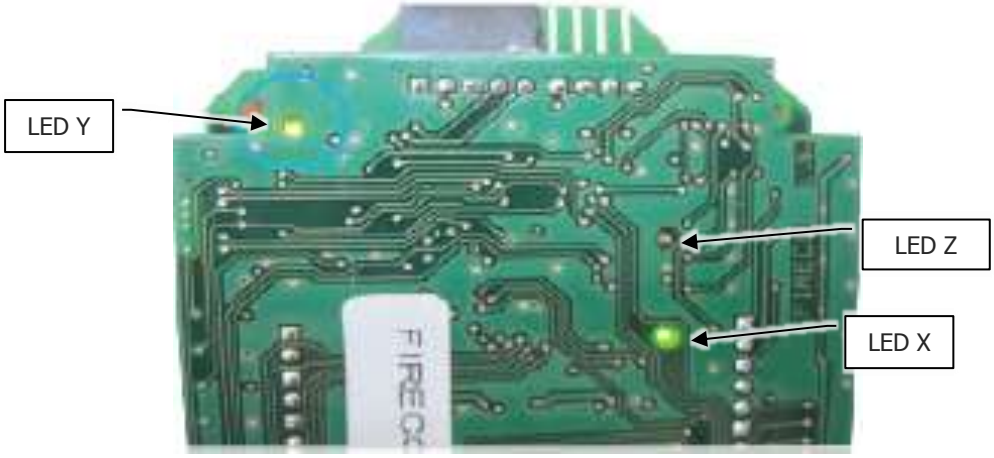

Figure 5-4.5: Electronic board led indicator

- If LED X is flashing, it means that the control and the Double Layer electronic board are communicating properly. If the data transfer is interrupted, the LED stops flashing.
- The LED Y green light indicates that the system is supplied with power. If the LED is switched off, check the electrical power source (vehicle, fuses, reverse polarity, etc.)
- The LED Z red light indicates incorrect power voltage. The correct power supply range varies from 10.5V to 35V DC. If the supply voltage is outside of such range, the LED turns on.

THE MAST DOES NOT PERFORM VERTICAL MOVEMENTS CORRECTLY

ISSUE	SOLUTION
1. Occlusion or narrowing of the pneumatic tubes or lack of air from the supply line	Remove the cause of the crush. If the pneumatic tubes are damaged as a result of the crushing, replace them with new pneumatic tubes. Restore the pneumatic connections as per paragraph 4-6
2. Anomalies in the pneumatic circuit	Check that the pneumatic tube is correctly plugged into the appropriate quick link and that it is not damaged, crushed or bent. Make sure that the circuit is pressurized (max. 2.5 bar). Check that the extension regulator is open on the solenoid valve set. Check that the air inlet/outlet valve is working and connected properly.
3. Obstacles or entangled cables which impede the normal functioning.	Interrupt immediately any movement of the mast. Remove the obstacles or fix the cable entanglement issue. If the problem persists, contact Fireco Srl.

© FIRECO S.r.l. 2018

4.	EV Group Failure	Replace the EV group as follows: Cut off power from the machine. Uncouple the pneumatic tube from the pneumatic energy source. Remove the EV group and replace it with a new EV group. Restore the pneumatic connections as per paragraph 4-6.
5.	Insufficiency/failure in the compressed air supply system	Disconnect the power from the mast (be it a pneumatic line or an electric compressor) and check it is working properly, to verify that the fault does not involve the mast. Refer to the compressor use and maintenance manual attached (if any) or contact 79pecialized technicians who are able to intervene on the compressed air supply line.
6.	Discharge valve failure	Replace the discharge valve if it is clogged, blocked or broken.
7.	Filter occlusion on the electrovalves group (if present) 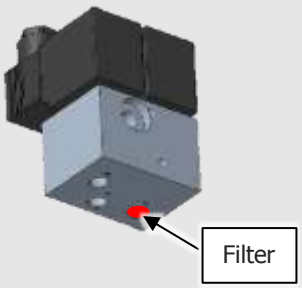 	Clean the filter of the electrovalves group as follows: Separate the machine from its electrical supply Remove the coupling of the pneumatic hose coming from the pneumatic supply source Remove the electrovalves group Take out the filter piece (s. figure to the left, in which the back side of the electrovalves group is shown). Clean the filter or replace it with an equivalent spare part. Reassemble in the following order: the filter piece, the electrovalves group and restore the pneumatic connections as explained in paragraph 4-6.
8.	In conditions of very low temperature, ice may form inside or on the surface of the mast, which may, in particular, prevent the mast from closing.	If there is ice on the outer surface of the mast, clean the mast using alcohol or spray antifreeze products on the guiding rings. In the case that some ice formed inside, use a suitable antifreeze product inside the mast (through the rainwater drain hole or from the top). Do not use products that may damage the mechanical and electronic components. Contact the manufacturer for recommendations on antifreeze liquid products.
9.	Permanent deformation of the mast due to overload, damage following an impact or other causes	Contact the manufacturer for an extraordinary maintenance operation.
10.	Seizure of the mast elements or seal failure	Contact the manufacturer for an extraordinary maintenance operation.
11.	Failure/malfunction of the multifunc-tional control	Before replacing, check the dedicated paragraph.
12.	Air leak in the mast	Contact the manufacturer for an extraordinary maintenance operation.
13.	Fault/malfunction of the electronic board	Before replacing, check the dedicated paragraph.
14.	General electrical failure	See dedicated paragraph.

© FIRECO S.r.l. 2018

GENERAL ELECTRICAL FAILURES

A machine failure could be due to a general electric fault.

Contact specialised technicians who can evaluate any failure at the power source (i.e. to check the condition of the protection fuse or the intervention of a circuit breaker).

Verify the integrity of cables and terminals.

Verify that the electrical connections are correct.

Check all internal coiled cable wires using a multimeter. If the internal coiled cable is damaged, contact the manufacturer to request extraordinary maintenance.

See the following paragraphs for the diagnostic procedures used in the case of failures of the multifunctional control.

FAILURE/MALFUNCTION OF THE MULTIFUNCTIONAL CONTROL

THE MAST IS NOT RECEIVING ANY COMMAND

If the mast is not receiving any command, proceed as follows.

- Run the "power feed test" by pressing the corresponding Battery check button (ID 11 in Figure 5-2.2)

If the led does not light up:

- Verify the proper connection to the electric power supply on the red and black wires at their connection point on the base of the mast. Refer to the wiring diagrams provided in the annex.
- Possibly, verify that the led indicator on the electronic board of the equipment on top actually lights up (see procedure on page 78).
- For SMART multifunctional controls exclusively, try connecting the multifunctional control to the power cable.
- For SMART and RADIO multifunctional controls only, run the frequency auto-learning procedure (see procedure on page 70).
- For SMART and RADIO multifunctional controls only, make sure you are using the multifunctional control within the device operating range.
- If external signals have been implemented (such as a limit switch on the parking brake or an operator presence sensor on the vehicle seat), verify that they have been activated or enabled properly for working with the mast.
- Make sure the multifunctional control buttons have been enabled correctly by pressing the two green buttons simultaneously (ID 1 and 9 in Figure 5-2.2).

THE MULTIFUNCTIONAL TILT AND TURN UNIT IS NOT PERFORMING ANY MOVEMENT

- Hold down the extension green button (ID 1 in Figure 5-2.2) for at least 7 seconds, not necessarily uninterruptedly (the duration may vary depending on the customer's customizations agreed upon at the time of ordering). In fact, during this time any electrical movement is locked for safety reasons.

© FIRECO S.r.l. 2018

- If provided, make sure that the "mast fully extended" safety sensor is in good condition and working properly.

MULTIFUNCTIONAL TILT AND TURN UNIT LAMPS DO NOT LIGHT UP

- Check that the bulbs have not burned out. In the case replacement is needed, disassemble the unit affected by the failure according to the procedure described in paragraph 4-5.
- Verify the relay set inside the lamp check compartment is working properly, near the electronic board of the equipment on top.

The following images show, as an example, a TT SPARK multifunctional head.

In order to gain access to the relevant parts, unscrew and remove the top cover (pos. **A** in the figure below) and the lateral covers (pos. **B**).

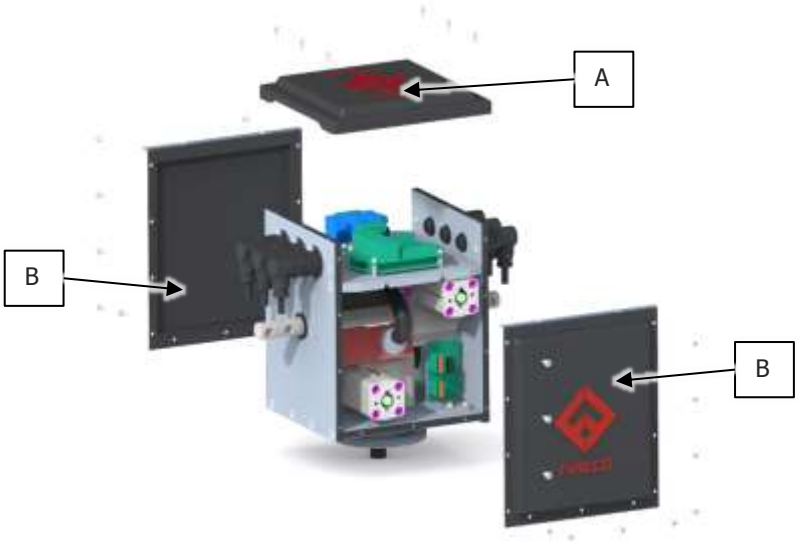

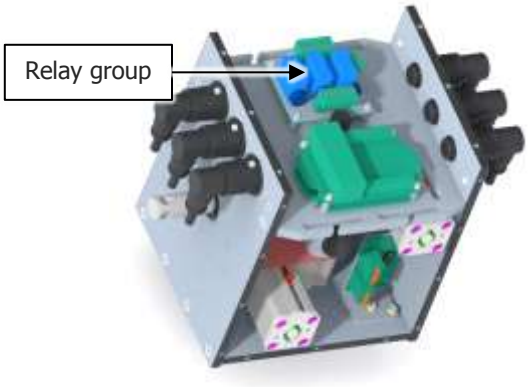

THE MAST DOES NOT PERFORM THE AUTOMATIC RESTORE

After pushing the yellow button (ID 2 in Figure 5-2.2), the correct sequence of movements that the machine must perform is as follows:

- The floodlights are switched off by sets.
- The lamp unit will return to the zero position. One motor at a time is expected to start according to the following sequence:

© FIRECO S.r.l. 2018

- tilt 1
- rotation
- tilt 2 (if provided)
- The mast will retract.

If this sequence does not perform correctly, the issue concerns the last element, which has not been activated properly.

Proceed as follows:

- Verify that the machine is not underpowered: insufficient voltage may prevent the system from performing movements.
- If the mast finds itself in the extended/opened state, verify that the problem is not caused by the solenoid valve group.
- The problem could be caused by the setting of the zero position of the end stop microswitches coupled with the actuators in the TT unit. Please contact Fireco Srl for an extraordinary maintenance intervention.

© FIRECO S.r.l. 2018

6 MAINTENANCE

1 WARNING

The following statements are related to the inspection and maintenance operations to be carried out by the customer and represent the fundamental rules to always keep the machine perfectly efficient. All other maintenance operations must be carried out by the machine manufacturer or by the designated technical personnel; if done otherwise, any warranty condition will decay.

The scheduled routine maintenance comprises inspections, checks and interventions that, in order to prevent interruptions and breakdowns, consistently check the machine's state of lubrication and the state of the parts that are subject to wear.

These operations, albeit simple, must be performed by qualified personnel, in order to avoid compromising the equipment's functionality and the safety of the operators and the workers who use the product.

The machine has been designed to reduce the ordinary maintenance; yet it is the operator's responsibility to judge its state and its suitability for use.

However, we recommend that you stop the machine and start maintenance operations as soon as you notice any malfunctioning issues: this will guarantee constant maximum efficiency.

In case of failures that require extraordinary maintenance, please contact FIRECO S.r.l., referring to the contact details shown in paragraph 1-1.

Any extraordinary maintenance operation performed by the customer, or by personnel that has not been authorised by FIRECO S.r.l., will result in the immediate revocation of any form of warranty.

Always use the appropriate P.P.E. - Personal Protective Equipment:

- gloves;
- non-slip footwear;
- suitable clothing.

2 SPECIAL PRECAUTIONS

While carrying out maintenance operations, thoroughly follow the instructions below:

- before starting work, expose a signpost indicating "MACHINE MAINTENANCE" in a visible position;
- make sure that the area used for maintenance operations is only accessible by authorised personnel;
- Be careful not to disperse potentially polluting substances in the environment.
- Any intervention of personnel at a height, which will require the use of lifting means (not supplied), must take place in accordance with the safety standards in force. The lifting means must be adequate, correctly positioned and made stable by taking all the necessary precautions. Likewise, also the operator's behaviour must be appropriate to the circumstances and to the working height.
- use adequate lifting means for moving the parts with a weight greater than 15kg;
- Do not climb on the components of the machine, as they were not designed to support people.
- Upon work completion, restore and properly secure all the protections and guards that may have been removed, opened and/or disabled.

WARNING

Any maintenance operation carried out on the product described in this manual must be performed by qualified technicians and/or trained staff to avoid compromising the equipment functionality and the operators' safety

WARNING

If you need to carry out operations while the machine is supplied with energy, all precautions required by safety standards must be taken to operate in the presence of dangerous voltage, under direct control authorized by the maintenance manager. In particular, operators will have to be qualified as "experts" in accordance with the standards EN 50110-1:2014 (Europe), NFPA 70E:2018 (USA) or CSA Z462:2018 (Canada), depending on the country of installation.

WARNING

The solvents used to clean the various parts of the product may be potentially harmful and flammable.

Make sure that the staff knows and follows the safety recommendations provided by the solvent manufacturer.

WARNING

© FIRECO S.r.l. 2018

The manufacturer is not responsible for the customer's failure to comply with the above recommendations and for any other use different from or not mentioned in these instructions.

3 INSULATION FROM SOURCES OF ENERGY AND DISSIPATION OF RESIDUAL ENERGIES

Routine maintenance can be carried out while the machine is on and functioning, in compliance with the procedures indicated in this chapter.

In the event of disassembly or extraordinary maintenance, it is necessary to:

- Set the mast to its completely lowered position. If possible, set aside the mast by using the multifunctional control. Only if using the multifunctional control is not possible, proceed with the manual closing of the mast (please refer to the relevant procedure and to the warnings in paragraph 5-3)
- Insulate the machine from its power source, using the disconnection device of the compressor or of the electrical power supply provided by the customer. Lock the disconnecting device in the open position.
- Insulate the machine from its pneumatic power source (for example closing the compressed air supply general valve or by removing power from the compressor, etc.) and lock the sectioning devices into the open position.

If necessary, return the machine to the manufacturer.
For any disassembly operation and for transportation, please follow the instructions given in chapter 4.

4 USEFUL LIFE

Under normal conditions of use, the machine's useful life is estimated to be approximately **10 years**. At the end of the machine's useful life, it must be thoroughly overhauled and inspected in order to verify the wear and general operation state.

The inspection and verification activities must be carried out by the technicians entrusted by the manufacturer.

© FIRECO S.r.l. 2018

5 SCHEDULED ROUTINE MAINTENANCE

WARNING

The customer will have to **keep track** of all routine maintenance performed on the product by noting:

- date of the intervention;
- name of the person in charge of carrying out the operation;
- operation carried out.

The following table summarizes the necessary ordinary inspection and maintenance operations for the mast. See the dedicated paragraphs for further operational details.
For maintenance related to the electric compressor (if any) please refer to the instructions given in the respective use and maintenance manual provided in the annex.
Unless otherwise specified, in case you encounter problems or unusual issues, please contact the manufacturer's Technical Support.

SCHEDULED MAINTENANCE TABLE:

	TIMING	TYPE OF INTERVENTION
1	Before each use, but at least weekly	Check the tightening torque of the fixing elements
2	Before each use, but at least monthly	General check and inspection
3	Before each closing of the mast and whenever needed	Cleaning
4	Before each closing of the mast, but at least every 3 months	Check the discharge/drain valve
5	Before each use and every six months	Check the integrity of the power supply circuits and control devices

Tab. 6-6.1: Scheduled Maintenance Table

WARNING

Failure to comply with what is required will relieve the manufacturer of any liability with respect to the warranty.

© FIRECO S.r.l. 2018

1. CHECKING THE TIGHTENING TORQUE OF THE FIXING ELEMENTS

Make sure no screws or nuts are loose or missing. Pay special attention to the elements that fix the mast to the site.

Restore the missing threaded connections and tighten the loose ones.

2. GENERAL INSPECTION AND CHECK

Check for the integrity of the mast and its top equipment, verifying the absence of any deterioration due to failures or deformation.

Visually inspect the coating conditions, which must be in good condition and should not have exposed parts.

Make sure there is no rust on the components of the mast and on the threaded connections. For any damage to the upholstery (cracks, crevices and major damage) or in the presence of rust, please contact Fireco Srl.

Also check that there are no air leaks.

Check that there are no obstructions or foreign materials. Otherwise, proceed with the cleaning as indicated in the following paragraph.

3. CLEANING

Visually inspect the outer surfaces of the mast to verify that there are no clogs or foreign bodies.

Thoroughly clean the sections, using a damp cloth to cleanse and remove dust from the parts indicated.

While the machine is on and functioning, clean the lowest part of the section by hand going as far as you can, without the aid of any means (such as ladders, lifting platforms, etc.).

Clean:

- the metal surfaces using denatured alcohol;
- the rubber and plastic materials using water;
- the outer surfaces of the tubes using soap and water.

Check that the condensate drain holes are not occluded. Remove any deposits and/or substances that have blocked the hole

In compliance with the procedures set out in paragraph 5-3, close the section of the mast that has just been cleaned, in order to be able to reach a new section part of the telescopic element or a new section.

NOTE: Do not resort to the automatic deactivation, rather use the dedicated hold-to-run command (ID 2 in Figure 5-2.2).

Proceed likewise gradually cleaning all the sections until the complete closing of the mast.

© FIRECO S.r.l. 2018

When the mast is completely closed, clean the lamp units with a wet cloth and a cleaning solution that is suitable for glass surfaces.
In any case don't use devices such as pressure washers to avoid damages on the internal electronic components.

4. DISCHARGE/DRAIN VALVE CHECK

Check the correct functioning of the discharge/drain valve in the following manner:

- Fully extend the mast.
- Try to lead air into it by means of slight overpressure above the expected limit (2.5 bar)
- If the discharge/drain valve is working properly, the valve should open automatically once the pressure limit has been exceeded.
- Restore the correct pressure pneumatic system values

5. CHECKING THE POWER CIRCUITS AND CONTROL DEVICES INTEGRITY

Periodically check the integrity of the power circuits.
Check the following:

- Integrity of tubes, wires and clamps;
- Integrity of junction boxes and terminal boards;
- While the machine is off, check the mechanical operation of the control system buttons;
- Readability of command labels;
- Continuity of ground circuit.

Contact Fireco S.r.l. if you find that one or more components are damaged or in case of abnormal situations.

6 EXTRAORDINARY MAINTENANCE

Since the extraordinary maintenance operation is necessary when a fault occurs, you cannot predict the timings or the frequency.

For extraordinary maintenance contact FIRECO S.r.l. directly, which will provide for the intervention directly or via trusty authorised workshops.

WARNING

It is important that you do not alter, even minimally, the machine characteristics by means of incorrect installation or the use of non-original parts.

© FIRECO S.r.l. 2018

7 ACCESSORIES AND SPARE PARTS

1 SERVICE

For any other type of information related to the machine installation, use and maintenance, please always contact the manufacturer.
The customer should always ask questions in clear terms, with references to this manual and to the instructions listed.

2 SPARE PARTS

WARNING
ALWAYS USE ORIGINAL SPARE PARTS.
FOR ANY SPARE PART, PLEASE CONTACT THE MANUFACTURER.

All spare parts must be original parts provided by FIRECO S.r.l.
All defective parts must be replaced with products having the same code.

We do not recommend the use of non-original parts: contrary cases will nullify the warranty conditions (if still existing) and the manufacturer will no longer be responsible for the machine use and for any damage to people and/or things.

For each repair operation or spare part request, always mention the serial number shown on the mast or on the Conformity Declaration.

© FIRECO S.r.l. 2018

8 ADDITIONAL INSTRUCTIONS

1 TAKING OUT OF SERVICE AND DISMANTLING

Before performing any type of intervention it is necessary to:

- Set the mast to its completely lowered position.
- Remove the equipment placed on top of the mast.
- Insulate the machine from its energy supply sources.
- Remove the mast from the installation site.
- Move the machine or its parts according to the instructions given in chapter 4.

2 WASTE DISPOSAL

It is the user's responsibility, according to the laws in force in their own country, to verify the correct disposal of the waste that the machine produces during its entire life cycle.

Upon dismantling, it is necessary to separate the plastic, the metal parts and the electrical components, which must be collected in separate environments in compliance with the regulations in force.

As far as the metal mass of the machine is concerned, the user will just need to separate the ferrous parts from those made of other metals or alloys, for a proper submission to fusion recycling.

The product shown in this manual is composed of various elements made of different materials:

- Aluminum
- Steel
- Copper
- Plastic

Even the packaging of the product itself may be composed of different materials:

- Cardboard
- Wood
- Plastic

© FIRECO S.r.l. 2018

9 DRAWINGS AND DIAGRAMS

1 MACHINE DRAWINGS

2 PNEUMATIC DIAGRAMS

© FIRECO S.r.l. 2018

10 ANNEX A

11 ANNEX B

12 ANNEX C